NOT FOR OCCUPANCY:

THESE DRAWINGS REPRESENT THE SHELL BUILDING CONSTRUCTION DOCUMENTATION AND INCLUDE ASSOCIATED LANDLORD PROVIDED ITEMS VARIOUSLY REQUIRED BY A KNOWN TENANT. NO CERTIFICATE OF OCCUPANCY IS BEING ASKED FOR. THE TENANT IS REQUIRED TO SUBMIT SEPARATE INTERIOR CONSTRUCTION DOCUMENTS FOR REVIEW AND APPROVAL BY THE AUTHORITY HAVING JURISDICTION FOR WHICH THEIR CERTIFICATE OF OCCUPANCY WILL BE BASED UPON AND ISSUED.

CHIPOTLE MEXICAN GRILL BUILDING SHELL

2000 NOLTE ROAD ST. CLOUD, FLORIDA 34722

2

PROJECT SUMMARY

THE SCOPE OF WORK PROPOSED UNDER THIS PERMIT INCLUDES THE CONSTRUCTION OF A NEW SINGLE-STORY SHELL BUILDING FOR A FUTURE RESTAURANT TENANT. THE PROPOSED TOTAL BUILDING AREA IS 2,415 SQUARE FEET.

THE BUILDING WILL BE OF TYPE V-B CONSTRUCTION. WORK SHALL INCLUDE ALL STRUCTURAL COMPONENTS AND FINISHES THAT COMPRISE THE BUILDING ENVELOPE. INCLUDED IN THE SCOPE OF WORK WILL BE THE STUBBED-IN UTILITIES FOR THE FUTURE PLUMBING AND ELECTRICAL SYSTEMS.

CONSTRUCTION DRAWINGS FOR THE TENANT'S INTERIOR FINISH-OUT SHALL BE PROVIDED BY OTHERS AND SUBMITTED TO THE AUTHORITY HAVING JURISDICTION FOR APPROVAL AND PERMIT PRIOR TO CONSTRUCTION.

PROJECT CODE DATA

APPLICABLE CODES (with local amendments)

- FLORIDA BUILDING CODE-BUILDING (8th EDITION)
- FLORIDA BUILDING CODE-ACCESSIBILITY (8th EDITION)
- FLORIDA BUILDING CODE-ENERGY CONSERVATION (8th EDITION)
- FLORIDA BUILDING CODE-FUEL GAS (8th EDITION)
- FLORIDA BUILDING CODE-MECHANICAL (8th EDITION)
- FLORIDA BUILDING CODE-PLUMBING (8th EDITION)
- FLORIDA FIRE PREVENTION CODE (8th EDITION)
- NATIONAL ELECTRIC CODE (2020 EDITION)

BUILDING STATISTICS

OCCUPANCY	GROUP A-2 ASSEMBLY
CONSTRUCTION TYPE	TYPE V-B
FIRE SPRINKLERED	NO
FIRE ALARM	NO
ALLOWABLE AREA	6,000 GROSS SQUARE FT. PER FBC TABLE 506.2 (A-2 OCCUPANCY)
ALLOWABLE AREA (MODIFIED)	AREA MODIFICATION IS NOT REQUIRED
PROPOSED AREA	2,415 SQ. FT.
NO. OF STORIES	1 ALLOWED / 1 PROPOSED
ALLOWABLE HEIGHT	40'-0" ALLOWED / PROPOSED HEIGHT = 20'-8" (HIGHEST POINT)
ALLOWABLE HEIGHT (MODIFIED)	HEIGHT MODIFICATIONS ARE NOT REQUIRED
MAXIMUM TRAVEL DISTANCE	200' (UNSPRINKLERED)
MAX. DEAD END CORRIDOR	OCCUPANCY A-2 = 20'
MINIMUM CORRIDOR WIDTH	44" REQUIRED
MINIMUM STAIR WIDTH	N/A

TABLE 601 - FIRE RESISTANCE RATINGS FOR BUILDING ELEMENTS

PRIMARY STRUCT. FRAMEWORK	0
EXTERIOR BEARING WALLS	0
INTERIOR BEARING WALLS	0
EXTERIOR NON-BEARING WALLS	(SEE NOTES BELOW FOR TABLE IBC 602)
INTERIOR NON-BEARING WALLS	0
FLOOR CONSTRUCTION	0
ROOF CONSTRUCTION	0

TABLE 602 - FIRE RESISTANCE RATINGS FOR EXTERIOR WALLS BASED ON FIRE SEPARATION DISTANCE

	SEPARATION DISTANCE	FIRE RATING	WALL AREA	OPENING AREA	% OPENINGS ALLOWED	% OPENINGS PROPOSED
EAST	> 30'	0	*	*	NL	*
NORTH	> 30'	0	*	*	NL	*
WEST	> 30'	0	*	*	NL	*
SOUTH	> 30'	0	*	*	NL	*

* WHERE SEPARATION FROM PROPERTY LINES EXCEEDS 30 FEET, THERE ARE NO LIMITS FOR UNPROTECTED WALL OPENINGS. CALCULATIONS FOR WALL AREA, OPENING AREA AND PROPOSED OPENING PERCENTAGES NOT PROVIDED IN SUCH INSTANCES

OCCUPANT AND PLUMBING CACULATIONS

OCCUPANT LOADS AND PLUMBING CALCULATIONS WILL BE PROVIDED BY THE TENANT AS PART OF THE INTERIOR BUILD-OUT DOCUMENTS

PROJECT TEAM

APPLICANT
BRIGHTWORK REAL ESTATE
3708 W SWANN AVENUE
TAMPA, FL 33609
ATTN: WRIGHT BARRS
TEL: (813) 610-4685

JURISDICTION
CITY OF ST. CLOUD
1300 9TH STREET, BUILDING A
1ST FLOOR
ST. CLOUD, FL 34769
ATTN: COMMERCIAL PLAN REVIEW
TEL: (407) 957-7224

CONTRACTOR
T.B.D.

CIVIL ENGINEER
SUNCOAST CIVIL
2818 CYPRESS RIDGE BLVD,
SUITE 150
WESLEY CHAPEL, FL 33544
ATTN: TROY CARTER, P.E.
TEL: (813) 694- 7676

ARCHITECT
FWH ARCHITECTS, INC.
3336 GRAND BOULEVARD
SUITE 201
HOLIDAY, FL 34690
ATTN: ADRIENNE BAUER
TEL: (727) 815-3336

STRUCTURAL
ACG PROFESSIONAL ENGINEERING, INC.
16912 MELISSA ANN DRIVE
LUTZ, FL 33558
ATTN: ALAN GUENTHER
TEL: (813) 963-1906

MECHANICAL/PLUMBING
STEPANEK-LEWIS AND ASSOCIATES
2257 TWELVE OAKS WAY,
SUITE 103
WESLEY CHAPEL, FL 33544
ATTN: MATTHEW LEWIS
TEL: (813) 991-1248

ELECTRICAL
CHEHAYEB & ASSOCIATES
3702 AZEELE STREET
TAMPA, FL 33609
ATTN: SOUHEIL CHEHAYEB
TEL: (813) 876-1415

DRAWING INDEX

SHT. NO.	DRAWING TITLE	REVISION LOG (● INDICATES SHEETS AFFECTED)
G000	PROJECT AND CODE INFORMATION, DRAWING INDEX	●
	CIVIL	
	CIVIL AND LANDSCAPE DRAWINGS SUBMITTED UNDER SEPARATE PERMIT BY OTHERS	
	ARCHITECTURAL	
G010	ARCHITECTURAL SPECIFICATIONS	
G011	ARCHITECTURAL SPECIFICATIONS	
G012	ARCHITECTURAL SPECIFICATIONS	
G013	ARCHITECTURAL SPECIFICATIONS	●
G014	ARCHITECTURAL SPECIFICATIONS	●
G015	ARCHITECTURAL SPECIFICATIONS	
SP100	ARCHITECTURAL SITE PLAN	●
SP101	DUMPSTER PLAN AND DETAILS	
A100	FLOOR PLAN	●
A140	ROOF PLAN AND DETAILS	●
A300	EXTERIOR ELEVATIONS	●
A301	EXTERIOR ELEVATIONS	●
A400	WALL SECTIONS	●
A401	WALL SECTIONS	
A402	SECTION DETAILS	
A403	SECTION DETAILS	
A404	PLAN DETAILS	●
A405	WALL SECTIONS AND DETAILS	
A601	DOOR AND HARDWARE SCHEDULE	
A602	STOREFRONT DETAILS	●

SHT. NO.	DRAWING TITLE	REVISION LOG (● INDICATES SHEETS AFFECTED)
	STRUCTURAL	
S001	STRUCTURAL NOTES	
S100	FOUNDATION PLAN	●
S200	ROOF FRAMING PLAN	●
S300	WALL SECTIONS	
S301	STEEL ELEVATIONS AND DETAILS	
S400	SECTIONS AND DETAILS	
S401	SECTIONS AND DETAILS	
	PLUMBING	
P100	PLUMBING SPECIFICATIONS	
P200	PLUMBING FLOOR PLAN	●
P300	PLUMBING RISERS AND DETAILS	●
	ELECTRICAL	
E001	ELECTRICAL NOTES AND LEGEND	
E100	ELECTRICAL SITE PLAN	● ●
E101	PHOTOMETRIC SITE PLAN	● ●
E102	FIXTURE INFORMATION	● ●
E200	ELECTRICAL PLAN	●
E300	POWER RISER DIAGRAM	●
E400	ELECTRICAL SPECIFICATIONS	

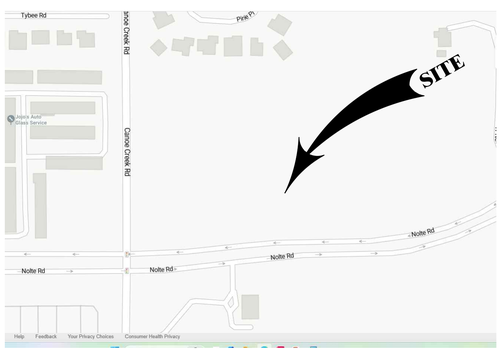

VICINITY MAP
NOT TO A SCALE

NORTH

FLORIDA PRODUCT DATA INDEX

PRODUCT CATEGORY	SUB CATEGORY	MANUFACTURER	FL. APPROVAL No.	DATE
ROOFING	SINGLE-PLY ROOFING SYSTEMS (PVC)	DURO-LAST ROOFING	16039.1 – R19	12/12/2023
PANEL WALLS	ALUM. STOREFRONT (IMPACT RATED)	KAWNEER COMPANY	14287.1 – R10	12/12/2023
EXTERIOR DOORS	SWINGING EXTERIOR DOOR ASSEMBLIES	KAWNEER COMPANY	28914.2 – R14	12/13/2023
PANEL WALLS	D/T PICK-UP WINDOW (IMPACT RATED)	QUICKSERV CORP.	NOA 23-0816.26	EXP. 11/28/28
STRUCTURAL COMPONENTS	PROD. INTRO. AS A RESULT OF NEW TECH.	CAST-CRETE USA, INC.	158.1 – R17	1/29/2024

THE CONTRACTOR SHALL SUBMIT MANUFACTURER TEST DATA & INSTALLATION/FASTENING REQUIREMENTS TO THE BUILDING DEPARTMENT FOR APPROVAL PRIOR TO FABRICATION & INSTALLATION. SUBMITTALS SHALL INCLUDE, BUT MAY NOT BE LIMITED TO, ALUMINUM STOREFRONT GLAZING SYSTEMS, EXTERIOR DOORS & FRAMES, AUTOMATIC SLIDING ENTRY DOORS, EXTERIOR WALL CLADDING & ROOFING SYSTEMS.

WIND DESIGN CRITERIA

1. ULTIMATE WIND SPEED = 140 (PER FBC-B FIGURE 1609.3(1))
2. WIND EXPOSURE "B"
3. BUILDING RISK CATEGORY II (PER FBC-B TABLE 1604.5)
4. INTERNAL PRESSURE COEFFICIENT (GCpi+ = +/- 0.18, TOTALLY ENCLOSED (PER ASCE 7-10)
5. COMPONENTS AND CLADDING - REFER TO STRUCTURAL DRAWINGS FOR WIND DESIGN CRITERIA

DEFERRED SUBMITTALS

THE FOLLOWING ITEMS ARE BEING REQUESTED FOR DEFERRED SUBMITTALS AND WILL BE PROVIDED FOR REVIEW BY THE GENERAL CONTRACTOR:

- ROOF JOISTS
- CANOPIES
- ROOFING SYSTEM

FWH Architects
3336 Grand Blvd. Suite 201
Holiday, Florida 34690
Ph. 727. 815. 3336
FABER@FWHARCHITECTS.COM

brightwork real estate
3708 WEST SWANN AVE.
SUITE 200
TAMPA, FL 33609
PHONE: 813.874.1700

TO THE BEST OF THE KNOWLEDGE OF THE ARCHITECT'S AND ENGINEERS, SAID PLANS AND SPECIFICATIONS COMPLY WITH THE APPLICABLE MINIMUM BUILDING CODES AND THE APPLICABLE MINIMUM FIRE SAFETY STANDARDS

GUY F. FABER
FL License No. AR0015323
seal

no.	date	revision descriptions
1	12.02.2025	REVISED PER COORDINATION W/ TENANT INTERIORS

CHIPOTLE MEXICAN GRILL
BUILDING SHELL
2000 NOLTE ROAD
ST. CLOUD, FLORIDA 34722
2 TYP.

08.29.2025
date

25008
comm. no.

PROJECT AND CODE INFORMATION, DRAWING INDEX

G000

12/3/2025 3:51 PM

DIVISION 1 - GENERAL REQUIREMENTS

SECTION 01100 - SUMMARY

1.1 Contract Documents:

A. Contractor shall use the following Landlord provided documents in the negotiation and execution of the Work. Contact Landlord's office for copies of these documents:
1. Construction Contract for shell building.

B. Definitions:

1. The term "Owner" used in these documents refers to the building Owner/Landlord.
2. The term "Tenant" used in these documents refer to the future restaurant Tenant.
3. The term "Contractor" used in these documents refers to the entity responsible for performing the Work under Construction Contract Owner.

1.2 Scope of Work:

A. The Work shall include construction of the site and building facilities as shown and specified in these Specifications and Drawings.

B. When required and necessary, the Landlord will provide a subsurface exploration report as an attachment the bidding documents.

SECTION 01300 - ADMINISTRATIVE REQUIREMENTS

1.1 Coordination:

A. Immediately inform the Architect of discrepancies between the information indicated in the Contract Documents and existing project conditions, and of discrepancies between information indicated on the architectural, structural, mechanical, plumbing and electrical documents.

B. Prior to fabrication and installation of new components, field verify all existing and new dimensions and installation conditions that may affect the Work. Do not scale the drawings to establish locations of items that are not located using dimensions.
1. All dimensions are to rough face of stud or centerline of structure, unless otherwise indicated.
2. Verify that all Subcontractors have reviewed and coordinated locations of their equipment and furnishings exposed to view with the architectural drawings. Review questions with the Architect.

C. Coordinate new work indicated on the Contract Documents with new work that may be provided by the Owner and Tenant under separate contracts.

D. Coordinate the work of Vendors, Contractors and Subcontractors providing fixtures, furniture and equipment identified as "by Tenant" in these drawings and specifications.
1. Notify the Tenant in timely fashion if any problems develop with the performance of these Vendors, Contractors or Subcontractors.

E. Coordinate the scheduling, sequencing, and the work of all trades and Subcontractors to assure efficient and orderly sequences of installation of interdependent construction elements.

F. Verify that the utility requirement characteristics of operating equipment are compatible with the building utility services. Coordinate work of the various specification sections having interdependent responsibilities for installing, connecting to, and placing in service such equipment.

G. Coordinate the installation and physical space requirements of plumbing, mechanical and electrical work that are indicated diagrammatically on the drawings. Follow routing shown for piping, ducts and conduit as closely as practical. Install runs parallel with and perpendicular to the line of the building. Utilize spaces as efficiently as possible to maximize accessibility for other work installation and for maintenance and for repair.
1. Conceal piping, ducts and conduit within the construction, except as otherwise indicated.
2. Coordinate locations of registers, fixtures and outlets with finish elements.

H. Coordinate completion and cleanup work of all trades and Subcontractors in preparation for Substantial Completion.

I. To minimize disruption of Tenant's activities after Tenant occupancy of the property, coordinate access to the property with the Tenant's Construction Manager for correction of defective work and work not in accordance with the Contract Documents.

1.2 Submittals:

A. Only when indicated in the specifications or drawings submit shop drawings, product data, and/or samples to the Architect for review. All submittals shall be made directly to the architect by the general contractor. Only submittals for specified products will be accepted unless prior approval has been obtained for a substitution (refer to Section 01630). Submittals shall be made with respect to the construction schedule to allow for adequate review time: allow (5) business days for review of submittals Divisions 3 through 10 and allow (10) business days for review of submittals in all other divisions.

Shop drawings: Submit electronic copies of each sheet of drawings. Shop drawings are original drawings prepared by the subcontractor or vendor for the purpose of conveying information to the architect and/or engineer on how a building element or product will be constructed in sufficient detail for the architect and/or engineer to determine compliance with the design intent.

In all cases one copy of the submittal shall be returned to the general contractor. Electronic submittals for shop drawing or product data in either PDF or DWF format are acceptable for review. All submittals, regardless of format, must bear the general contractor's stamp indicating the submittal has been reviewed and approved. Any submittal not meeting the requirements set forth will be rejected by the architect.

1.3 Requests For Information

A. In the event that the general contractor, or a subcontractor, at any tier, determines that some portion of the drawings, specifications, or other contract documents requires a clarification or interpretation by the architect, the general contractor shall submit a Request For Information in writing to the architect in an electronic copy.

Requests for Information may only be submitted by the general contractor and may only be submitted to the architect. The general contractor shall clearly and concisely set forth the issue for which clarification or interpretation is sought and why a response is needed from the architect or the architect's consultants. In the Request for Information, the general contractor shall set forth an interpretation or understanding of the requirement along with an explanation of why such an understanding was reached.

B. The architect will review all Requests for Information to determine whether they are Requests for Information within the meaning of this term. If the architect determines that the document is not a request for information, it will be returned to the general contractor, un-reviewed as to content, for re-submittal in the proper form and in the proper manner.

Responses to Requests for Information shall be issued upon receipt, but no later that five (5) working days of receipt of the Request from the general contractor; unless the architect determines that a longer amount of time is necessary to provide an adequate response. If a longer amount of time is determined necessary by the architect, the architect will, within five (5) working days of receipt of the Request, notify the general contractor of the anticipated response time. If the general contractor submits a Request for Information on an activity with five (5) working days or less of float on the current project schedule the general contractor shall not be entitled to any time extension due to the time it takes the architect to respond to the Request provided that the architect responds within the parameters set forth above.

C. Responses to Requests for Information from the architect will not change any requirements of the contract documents. In the event that the general contractor believes that a response to a Request For Information will cause a change to the requirements of the contract documents, the general contractor shall immediately give written notice to the architect and the tenant stating that the general contractor considers the response to be a Change Order. Failure to give such written notice immediately shall waive the general contractor's (or any subcontractor's) right to seek additional time or cost under the Administrative Requirements of these contract documents.

SECTION 01400 - QUALITY REQUIREMENTS

1.1 Regulatory Requirements:

A. Perform all work in accordance with applicable local, state, and federal building codes, plumbing codes, mechanical codes, electrical codes, ordinances and rules and regulations governing food service establishments.

B. Comply with local, state and federal requirements governing accessibility.

C. Obtain all required demolition and erosion control permits required by authorities having jurisdiction.

1.2 Quality Control:

A. Maintain quality control over manufacturers, suppliers, products, services, site conditions and workmanship, to produce work of specified quality.

B. Comply with manufacturer's instructions and applicable trade standards.

C. Handle, install, connect, clean, condition and adjust products in strict accordance with manufacturer's instructions and complying with specified requirements.
1. Request clarification from the Architect before proceeding, where manufacturer's instructions conflict with the Contract Documents.

D. Comply with specified standards as a minimum quality for the Work, except when more stringent tolerances, codes or specified requirements indicate higher standards or more precise workmanship.

E. Perform work by persons qualified to produce workmanship of the specified quality. Secure products in place with positive anchorage devices designed, sized and installed to withstand stress, vibration, physical distortion or disfigurement.

F. All dimensions shall be considered "hold-to" dimensions unless indicated otherwise (e.g. minimum or maximum dimensions.)

1.3 Testing:

A. Employ and pay for the services of an independent testing laboratory to perform inspections, tests and other services when required.

B. Include inspection and tests as indicated in the specification sections, drawings, and as required by authorities having jurisdiction.
1. Test concrete in accordance with Section 03300 and drawing requirements.
2. Test structural steel in accordance with Section 05110 and drawing requirements.

SECTION 01500 - TEMPORARY FACILITIES AND CONTROLS

1.1 Provide temporary facilities and controls as shown and specified:

A. Codes and Standards: Provide temporary construction facilities and controls complying with all applicable local, State and Federal local laws, regulations and codes and utility company requirements.

B. Temporary Heating, Ventilating and Cooling:

1. Provide, pay for and maintain all temporary heating, ventilating and cooling equipment and facilities required during the progress of the work to protect materials, finished work, and equipment against damage from low and high temperatures and humidity.
2. Provide temporary heating, ventilating and cooling when the outside temperature and humidity is low/high enough to damage or affect in any way the performance or quality of material and product stored in the building, in any temporary storage area, or any material or product incorporated into the work.
3. Provide temporary heating, ventilating and cooling when the outside temperature and humidity is low/high enough to significantly slow or hamper effectiveness of workers and to provide suitable working conditions.

C. Temporary Electrical Lighting and Power:
1. Provide, pay for and maintain all temporary electrical service for lighting and power required during the progress of the work. Include all necessary wiring, fuses, disconnect switches, safety devices, junction boxes, panels, ground fault protections, and transformer if required. Include cost for providing temporary electric generators in the Contract Sum, if temporary electric service is not available for use during progress of the work.
2. Temporary service and lighting and power items and installations shall conform to the requirements of the NFPA National Electric Code and OSHA Occupational Safety and Health Act of 1970.

D. Water: Provide, pay for and maintain all temporary water required during the progress of the work. Include all necessary storage tanks, piping, valves, fittings, hose and hose connections during construction and testing.

E. Temporary Toilets: Provide, pay for and maintain temporary toilet facilities for use by the Contractor, Contractor's employees and all Subcontractors and Subcontractors' employees. Comply with all local requirements for installation, use and maintenance of temporary toilet facilities.

F. Barriers and Enclosures:
1. Provide temporary construction barriers in accordance with project requirements. Exercise all necessary precautions to protect adjacent properties, outside project contact limits, during progress of the work. Take special precautions to avoid damage to existing overhead and underground utilities and services owned or operated by the Owner or by public or private utility companies.
2. Provide temporary weather-tight enclosures at exterior openings to provide acceptable working conditions and protection of materials and to allow for temporary heating, ventilating and cooling.

G. Field Office, Telephone and Email:
1. Provide and maintain a temporary field office at the project site during progress of the work. A designated area within the existing building will be available for use as a temporary field office. Verify area size and location with the Tenant.
2. Maintain copies of permits, approved shop drawings, specifications, addenda and record documents at field office.
3. Provide temporary telephone service and internet service with email and photo capabilities to field office throughout progress of the work.
4. Provide weekly photographic documentation of project progression to Tenant.

H. Safety and Security
1. Provide and maintain all necessary safety provisions for protection and safety of the project work, workers and general public.
2. Provide and maintain operable fire extinguishing devices in well-marked, accessible locations throughout the project. Provide types, quantities and locations in compliance with governing codes and ordinances.
3. Provide all necessary security barriers and enclosures to protect the work and Tenant's operations from unauthorized entry of persons, vandalism and theft. Provide doors, when required, with selfclosing hardware and locks.

I. Cleaning
1. During Construction: Provide an approved on-site container for the use of all Contractors and Subcontractors for the collection of waste materials, debris and rubbish. Execute periodic cleaning to keep the work, the site and adjacent properties free from accumulations of waste materials, rubbish and windblown debris, resulting from construction operations. Remove crates and cartons in which materials, equipment, or fixtures are received to on-site containers daily.
a. Maintain the property in a clean and orderly condition. Remove waste materials, debris and rubbish from the site on a daily basis and dispose of at legal disposal areas away from the site.

2. Dust Control:
a. Remove debris and rubbish from pipe chases, plenums and other similar closed or remote spaces prior to covering or enclosing the space.
b. Sweep and vacuum clean interior surfaces before start of surface finishing and painting. Continue cleaning on an as-needed basis until finishing and painting is completed.
c. Cleaning operations shall be acceptable to the Tenant's Construction Manager.

SECTION 01630 - SUBSTITUTIONS

1.1 General:

A. Products, including materials, equipment and systems described in the Contract Documents establish the standards of required function, dimension, appearance, quality and performance of the Work. Base all bids on the "Standards" indicated.

B. Requests by the Contractor for changes in products, manufacturers, fabricators, suppliers, installers, and methods of construction required by the Contract Documents are considered requests for "substitutions:" Substitutions will be considered only under the following conditions:
1. The indicated "Standard" cannot be provided within the Contract Time
2. The indicated "Standard" cannot receive necessary approval by the governing authority.
3. A substantial advantage is offered the Owner, in terms of cost, time, energy conservation or other considerations of merit as determined by the Architect.

C. Submit each request for substitution to the Architect. Identify the product, manufacturer, fabricator, supplier, installer or the fabrication or installation method to be replaced in each request. Identify related Specification Section and Drawing numbers. Provide documentation as directed by the Architect.

D. Substitutions will not be considered when indicated on shop drawings or product data submittals without separate written request, when requested directly by subcontractor, manufacturer, fabricator, or supplier, or when acceptance will require substantial revision of the Contract Documents.

E. Substitute products, manufacturers, fabricators, suppliers, and installers shall not be used for the Project without Tenant and Architect's written acceptance.

SECTION 01700 - EXECUTION REQUIREMENTS

1.1 Preparation:

A. Protection of existing construction: Use all necessary care and appropriate means and methods to protect and prevent damage to existing construction and property not part of the Contract Work. Repair and refinish or replace construction and property damaged during construction work, at Contractor's expense.

1.2 Selective Demolition: Provide selective demolition as shown and specified.

A. Preparation:
1. Coordinate work of this Section with work of various Contractors and Tenant's staff.
2. Maintain protected access at all times.
3. Erect and maintain weatherproof closures at exterior openings.
4. Erect and maintain dust-proof interior partitions to prevent spread of dust or fumes.
5. Erect and maintain barricades, enclosures, bracing, shoring, lights, warning signs and guards necessary for worker and public safety and protection of property.
6. Disconnect, remove and cap designated utility services. Identify and mark locations of disconnected and capped utilities at the project site and on Project Record Documents.
7. Notify and coordinate with the Tenant's Construction Manager and the building Owner for any demolition occurring outside the lease limit.
8. Coordinate hours of operation and construction access with the Tenant's Construction Manager and the building Owner.

B. Selective Demolition
1. Remove existing construction to accommodate new construction as indicated.
2. Perform selective demolition in an orderly, systematic and careful manner with least possible disturbance to public and adjacent property. Use of explosives is prohibited.
3. Immediately remove from the site and legally dispose of demolished materials, except as indicated otherwise. Do not burn or bury materials on the project site.

1.3 Cleaning

A. Final Cleaning: Perform final cleaning upon completion of project work.
1. Remove waste and surplus materials, rubbish, tools, equipment and temporary construction facilities from the site.
2. Clean exterior grounds; remove stains, spills and foreign materials from paved areas, power wash and sweep clean. Rake clean landscaped surfaces of the grounds.
3. Remove temporary protection and labels not required to remain.
4. Clean all finished surfaces. Remove grease, mastic, adhesives, dust, dirt, stains, fingerprints, labels and other foreign materials from exposed interior and exterior surfaces.
a. Clean all plumbing, fire protection and electrical fixtures and equipment including ceiling area elevated ductwork and lighting fixtures.
b. Clean permanent equipment filters and replace temporary disposable filters in mechanical units used during construction.
c. Clean ducts, blowers and coils if mechanical units were operated without filters during construction.
5. Clean interior and exterior glazing and mirrors, polish transparent and glossy surfaces and clean floors with appropriate materials and equipment.
6. Remove waste, foreign material and debris from roofs, areaways and drainage systems.
7. Before Tenant occupancy, conduct an inspection, with the Tenant, of exposed interior and exterior surfaces at all work areas, to verify that the entire work is clean.

1.4 Starting and Adjusting:

A. Prior to Substantial Completion, coordinate the start-up, test and balance, placement in operation and adjustment all systems, controls and equipment to verify proper operation. All systems shall be complete and operating prior to final inspection.

1.5 Contract Closeout:

A. Operation and Maintenance Data: Submit one operation and maintenance manual, bound in 8-1/2" x 11" text pages, three D side ring capacity expansion binders with durable plastic covers.
1. Subdivide the binder contents internally with permanent dividers logically organized as described below. Provide tab titles clearly printed under reinforced laminated plastic tabs.
2. Provide a table of contents with each product or system description identified.
3. Provide a directory listing names, addresses, and telephone numbers of the project Architect/Engineer, Contractor, Subcontractors and major equipment suppliers.
4. Prepare operations and maintenance instructions arranged by system and subdivided by specification section. Identify names, addresses, and telephone numbers of project Subcontractors and suppliers. For each category, identify the following:
a. Significant design criteria.
b. List of equipment.
c. Parts list for each component.
d. Operating instructions.
e. Maintenance instructions for each equipment item and systems.
f. Maintenance instructions for special finishes, including recommended cleaning methods and materials and special precautions for identifying detrimental agents.
5. Submit operations and maintenance data to the Tenant with final application for payment in accordance with Exhibit C of the Construction Contract.

B. Record/As Built Documents:
1. Prepare and maintain on site one set of the following record/as built documents:
a. Contract Documents.
b. Construction Documents.
c. Change orders and other modifications to the Contract.
d. Shop drawings, product data, and samples.
e. Construction schedule.
2. Store record/as built documents separate from documents used for construction.
3. Record actual revisions to the Work, concurrently with construction progress.
4. Legibly mark and record a description of actual products installed at each specification section, including the following:
a. Manufacturer's name and product model and number.
b. Approved product substitutions or alternates utilized.
c. Changes made by addenda, change orders, and other modifications.
5. Legibly mark each item to record actual construction, including the following:
a. Measured depths of foundations in relation to finish first main floor datum.
b. Measured horizontal and vertical locations of underground utilities and appurtenances, referenced to permanent surface improvements.
c. Measured locations of internal utilities and appurtenances concealed in construction, referenced to visible and accessible features of the work.
d. Field changes of dimension and detail.
e. Details not on original Contract Document drawings.
6. Submit record/as built documents to the Tenant with final application for payment in accordance with Exhibit C of the Construction Contract.

C. Warranties and Bonds:
1. Compile warranties and bonds required by the Contract Documents.
2. Submit duplicate copies of warranties and bonds to the Tenant with final application for payment in accordance with Exhibit C of the Construction Contract.

D. Maintenance Materials and Spare Parts:
1. Provide extra maintenance materials and spare parts in quantities indicated in the specification sections.
2. Place in location as directed by the Tenant's Construction Manager.

DIVISION 2 - SITE CONSTRUCTION

1.1 General: Provide site construction work, including services, utilities, earthwork, paving and landscaping in accordance with the site construction work drawings and details.

DIVISION 3 - CONCRETE

SECTION 03300 - CAST-IN-PLACE CONCRETE

1.1 General: Provide cast-in-place concrete work in accordance with the General Structural Notes, structural drawing and details. Follow shell building documents for specifications, joints and geotech.

A. Standards: Materials and construction shall conform to the following:
1. ACI 117 "Standard Tolerances for Concrete Construction and Materials."
2. ACI 301 "Structural Concrete for Buildings."
3. ACI 305R "Recommended Practice for Hot Weather Concreting."
4. ACI 306R "Recommended Practice for Cold Weather Concreting."
5. ACI 315 "Details and Detailing of Concrete Reinforcement."
6. ACI 318 "Building Code Requirements for Reinforced Concrete."

2.1 Materials:

A. Under Slab Vapor Retarder: Stego Industries LLC, 877-464-7834, internet www.stegoindustries.com high density polyethylene Stego Wrap (10 mil) Vapor Barrier meeting or exceeding ASTM E1745 performance criteria for Class C vapor retarders.
1. Seam Tape: High density polyethylene tape with pressure sensitive adhesive.
2. Pipe boots: Shop or site fabricated from vapor retarder material and seam tape.

B. Concrete:
1. Portland Cement: ASTM C150, Type I
2. Aggregate: ASTM C33.
3. Water: Clean and potable.
4. Reinforcement: When required, comply with drawings reinforcement requirements.
5. Compressive Strength: Minimum 3000 psi at 28 days.
6. Admixtures: All admixtures shall be approved by the Tenant's Construction Manager prior to placement in the concrete mix.

C. Topping Concrete: When required to suit installation conditions, Ardex Diama-Top of Ardex Engineered Cements (888) 512-7339, internet www.ardex.com
1. ULTRAFLOR ARDEX DIAMA-TOP, self-leveling concrete repair material.
2. Any pinholes that need to be filled shall be filled with ARDEX DIAMA-FILL filling compound for polished concrete, concrete terrazzo and other cementitious wear surfaces applied at the appropriate time during the polishing process.
3. The primer for areas to receive ARDEX DIAMA-TOP will be ARDEX EP 2000 Substrate Preparation Epoxy. Installation shall be performed by factory-trained professional applicators in strict accordance with 4. manufacturer's installation instructions.

3.1 Installation

A. Vapor Retarder: Place, protect and repair vapor retarder sheets in accordance with ASTM E1643 and manufacturer's installation instructions.
1. Provide a single layer of vapor retarder material over level compacted slab base.
2. Lap joints and seams 6 inches and seal with seam tape.
3. Seal all penetrations and repair damaged areas before concrete placement.

B. Reinforcement Place and inspect all reinforcing steel before concrete is placed.

C. Concrete Placement:
1. Place cast-in-place concrete in accordance with ACI 301 and ACI 305R and 306R recommended practices for hot weather and cold weather concreting. Do not place concrete when temperature is below 40 degrees F.
2. Wet cure concrete in accordance with ACI 301, using moist curing or moisture-retaining covers

D. Finish: Except where additional floor finish is scheduled, provide a smooth steel trowel finish.
1. Exposed concrete used as a finish floor surface shall have a smooth finished surface, uniform in texture and appearance and free of trowel marks and other defects affecting ease of maintenance.
2. Grind smooth surface defects as directed by the Tenant's Construction Manager.

E. Testing: When required, comply with drawings and specification sections testing requirements.

F. Topping Concrete: Prepare concrete floor slab substrate surfaces, prime substrate surfaces, mix, install and finish topping concrete in accordance with manufacturer's application instructions.

DIVISION 4 - MASONRY
REFER TO SHEET G012 SECTION 04812 FOR THIN BRICK MASONRY SPECIFICATIONS
SECTION 04810 - UNIT MASONRY ASSEMBLIES

1.1 General: Provide unit masonry assemblies as shown and specified.

A. Standards: Materials and construction shall conform to the following:
1. ACI 530.1-02/ASCE 6-02/TMS 602-02 "Specifications for Masonry Structures."
2. NCMA "TEK Bulletins."
3. BIA "Technical Notes on Brick Construction."

2.1 Materials:

A. Concrete Masonry Units (CMU): Size and thickness as shown on drawings.
1. ASTM C 90, load-bearing, normal weight, natural color CMU, properly cured at time of delivery, linear shrinkage not to exceed 0.065%.
2. Provide special shapes where required.
3. Provide exterior wall CMU containing an integral polymeric water-repellent admixture.
a. Manufacturer: W. R. Grace "Dry-BlockR System Block Admix ".

B. Mortar Materials:
1. Portland cement: ASTM C150, Type I or III, natural color.
2. Masonry cement: ASTM C91, Type indicated, natural color.
3. Aggregate: ASTM C144, clean masonry sand.
4. Water: Clean, fresh and potable.
5. Provide all exterior wall masonry mortar containing an integral polymeric water-repellent admixture.
a. Manufacturer W. R. Grace, "Dry-BlockR Integral Water-Repellent Mortar Admixture".

C. Unit Masonry Mortar Mixes: ASTM C270 proportions by volume.
1. Face brick: Type N mortar.
2. Dye: SGS #60A "White" by Solomon Grind Services.

D. Reinforced Unit Masonry Grout Mixes
1. Concrete fill: ASTM C94 3,000 psi concrete.

E. Joint Reinforcement, Wall Ties And Anchors: Finish, ASTM A-153 hot-dip galvanized
1. Manufacturer: Hohman & Barnard, INC.
2. Horizontal joint reinforcement: Welded ladder type with matching corners and Tee units.
a. Single Wythe masonry: Standard single 9 gage side and cross rods. H&B - #220 Ladder-Mesh.
3. Anchoring devices: Provide strap anchors, inserts, bolts and rods of type and size indicated.
a. CMU to CMU: Strap anchors 1/4" x 1-1/4" x 24" steel with bent ends.
b. CMU to structural steel: H&B - VBT - Vee Byne-Tie With Plain Steel (Tie) Used In Conjunction With H&B #359 Weld-on Ties (Anchor Rods).
4. Masonry Veneer To Woof Framing: H&B - DW-10HS Veneer Anchor, With Adjustable 3/16" Cold-Drawn Steel Wire Tie Sections and 14 GA. Screw-On Attachment Plate.
a. Fasteners: Self-Drilling, Self-Tapping Screws, 1-1/4" X #10, Corrosion-Resistant Coated. Provide Two (2) Screw Fasteners for each Attachment Plate.
5. Seismic Masonry Veneer to Wood Framing: (When Required) H&B Seismic Plate Pintle HB-213S with HB-213 (T-Lok Tie)
a. Fasteners: Self-Drilling, Self-Tapping Screws, 1-1/4" X #10, Corrosion-Resistant Coated. Provide Two (2) Screw Fasteners For Each Attachment Plate.

F. Concealed Masonry Through-Wall Flashing: W. R. Grace "Perm-A-Barrier" self-adhering modified bituminous sheet, 40 mils thick.
1. Termination Mastic: W.R. Grace "Bituthene Mastic."
2. Primer: W.R. Grace "Bituthene P-300 Primer."
3. Termination bars: Extruded aluminum or stainless steel, 1" wide and .098" thick pre-punched at 6" on center, secured with stainless steel drive pins.

G. Accessories
1. Reinforcing bars: ASTM A615, Grade 60, deformed billet steel bars of sizes indicated.
2. Wall weeps: Dur-O-Wal D/A 1006 "Cell Vent", clear flexible polypropylene co-polymer.
3. Compressible joint material: Dur-O-Wal "Rapid Soft-Joint" D/A 2010.
4. Bond breaker strips: ASTM D226 No. 15 asphalt saturated roofing felt.
5. Cleaning agents:
a. Face Brick and CMU: ProSoCo, Inc., "Sure Klean New Masonry Cleaners."
b. ACMU: ProSoCo, Inc., "Sure Klean Burnished Custom Masonry Cleaner. "
6. Expansion/Control joint sealants: Polyurethane-based, elastomeric joint sealant complying with ASTM C920 and Section 07900 requirements. Color matched to adjacent surfaces.

FWH Architects
3336 Grand Blvd. Suite 201
Holiday, Florida 34690
Ph. 727. 815. 3336
FABER@FWHARCHITECTS.COM

brightwork real estate
3708 WEST SWANN AVE.
SUITE 200
TAMPA, FL 33609
PHONE: 813.874.1700

TO THE BEST OF THE KNOWLEDGE OF THE ARCHITECT'S AND ENGINEERS, SAID PLANS AND SPECIFICATIONS COMPLY WITH THE APPLICABLE MINIMUM BUILDING CODES AND THE APPLICABLE MINIMUM FIRE SAFETY STANDARDS

GUY F. FABER
FL License No. AR0015323
seal

no.	date	revision descriptions
1		
2		

CHIPOTLE MEXICAN GRILL
BUILDING SHELL

2000 NOLTE ROAD
ST. CLOUD, FLORIDA 34722

08.29.2025
date

25008
comm. no.

ARCHITECTURAL SPECIFICATIONS

G010

12/3/2025 2:52 PM

3.1 Installation

A. Preparation
1. Wet absorbent face brick masonry units requiring wetting, in accordance with BIA recommendations.
2. Lay concrete masonry units dry.
3. Establish, lines, levels and coursing. Ensure ties, anchors and flashing are correctly installed
4. Mix mortar cementitious materials and aggregate in a mechanical mixer. Add water in amount to provide satisfactory workable consistency of mortar. Retemper mortar as required within two hours of mixing to replace water lost be evaporation. Discard mortar after two and one-half hours of initial mixing. Do not use mortar after it has started to set.

B. Installation - General:
1. Build walls and other masonry construction to the full thickness shown. Build single wythe walls to the actual thickness of the masonry units, using units of nominal thickness shown.
2. Cut masonry units using motor-driven masonry saws to provide clean, sharp edges. Cut units to fit adjoining work neatly. Provide 100% solid units where cores would be exposed.
3. Cold weather construction, hot weather construction, and masonry construction tolerances: Comply with unit masonry standard ACI 530.1/ASCE 6/TMS 602 requirements.

C. Laying Masonry
1. Layout walls in advance to ensure accurate spacing of surface bond patterns, with uniform joint widths, and to properly locate openings, movement type joints, returns and offsets. Do not use less than half-size units at corners, jambs and other locations.
2. Lay up walls plumb and true to comply with ACI 530.1 tolerances. Provide square corners and angles, except as otherwise indicated, with courses level, accurately spaced and coordinated with other work.
3. Pattern bond: Running bond. Do not use units with less than 4" of horizontal face dimensions at corners or jambs.
4. Lay hollow CMU/ACMU with full mortar coverage on horizontal and vertical face shells. Bed CMU webs in mortar in starting courses. Maintain uniform 3/8" joint widths.
5. Lay face brick and solid CMU/ACMU with completely filled bed and head joints. Do not slush head joints. Maintain uniform 3/8" joint widths.
6. Compress and cut joints flush for masonry walls below grade or covered by other materials.
7. Tool joints in all exposed masonry work to a concave joint.
8. Provide interlocking masonry bond in each course at corners and intersecting walls.
9. As the work progresses, build in masonry accessories and related items. Fill in solidly with masonry around built-in items.
   a. Bed hollow metal frame anchors in mortar and fill space between hollow metal frames and masonry solid with fine mortar grout.
   b. Provide solid masonry bearing for all lintels, beams, joists, plates and load-bearing members.
   c. Take particular care to embed all conduits and pipes within concrete masonry without fracturing exposed shells and to fit units around switch, receptacle and other boxes set in walls. Where electric conduit, outlets, switch boxes and similar items occur, grind and cut units before building in services.
   d. Install anchors, plates and related work built into masonry work.
   e. Install reinforcing steel and concrete fill where indicated. Comply with drawing details.
10. Horizontal joint reinforcing: Provide continuous joint reinforcing at all concrete masonry walls as follows:
   a. In every second block course, 16" on center vertically, full height of wall and every block course where shown on the drawings.
   b. Lap reinforcement a full width at the corners and at intersections or use special fabricated sections.
   c. Fully embed side rods in mortar.
11. Anchoring masonry work: Provide anchoring devices of the type indicated or required.
12. Provide vertical expansion, control and isolation joints in masonry where indicated.
   a. When not indicated, at maximum 30'-0" on center.
   b. Locate control joints at points of natural weakness in masonry and acceptable to Architect.
   c. Joint sealant color shall match masonry materials sealed.
13. Lintels: Install loose steel lintels furnished under structural steel work where shown. Set lintels in full bed of mortar.
14. Flashing and weeps:
   a. Install concealed through wall masonry flashing at all wall sills, masonry openings in exterior walls with masonry above head, over all horizontal steel members built into masonry and elsewhere as indicated. Provide "drainage wall system" masonry construction.
   b. Provide end dams and positive slope to drain. Extend flashing vertically at least 8" and built into or anchor to back-up with a termination bar for a complete watertight installation.
   c. Flexible Membrane Flashing:
      1.) Install membrane flashing in accordance with manufacturer's installation instructions.
      2.) Fully adhere flashing to substrate.
      3.) Lap flashing joints a minimum of 6", seal and roll with a hand roller.
      4.) Trim bottom edge 1/4" back from exposed face of masonry.
      5.) Seal edges, seams, cuts and penetrations with manufacturer's recommended mastic.
15. Install weeps in head joints of final course of exterior masonry wythe above flashing. Space weeps maximum of 24" on center horizontally and located to avoid door openings. Install weeps at head joints with outside face of weep material held 1/8" from the finish face of masonry unit.
16. Install compressible joint material at lintels and horizontal steel members. Build in joint fillers and seal with elastomeric joint sealant.

D. Masonry Veneer Walls:
1. Metal framed walls: Tie exterior masonry veneer wythe to back-up wall with individual metal ties screwed to metal stud framing.
2. Space ties 16" on center vertically and horizontally.
3. Maintain veneer wall cavity free of mortar droppings during masonry installation.

E. Parging:
1. Dampen masonry walls prior to parging.
2. Scarify each parging coat to Wensure full bond to subsequent coat.
3. Parge masonry walls in two uniform coats of mortar to a total thickness of 3/4 inch (19mm).
4. Steel trowel surface smooth abs flat with a maximum surface variation of 1/8 inch per foot (1mm/meter).

F. Reinforced Concrete Masonry
1. Reinforce and fill CMU/ACMU wall and column masonry where indicated. Fill all cores solid with concrete fill. Comply with NCMA TEK Bulletins 3-2, 3-3A and 14-2 recommendations.
   a. Comply with drawing details for reinforcing steel size and spacing.
2. Install bond beams where indicated. Reinforce and fill units solid with concrete fill. Comply with drawing details for reinforcing steel size and spacing.

G. Repair, Pointing and Cleaning
1. In process cleaning: Wipe off excess mortar as the work progresses. Dry brush with bristle brushes exposed masonry at the end of each day's work. Remove mortar spatters and joint ridges.
2. Clean all exposed masonry. Cleaning agents subject to Architect's approval. Before applying any cleaning agent to the entire wall, clean a sample wall area of approximately 20 square feet in a location acceptable to the Architect. Do not proceed with final cleaning until the sample area has been allowed to dry a minimum of 3 days and the test area cleaning approved. Protect all windows, doors, louvers, metal lintels and other corrodible parts. Damaged materials and work replaced at Contractor's expense.
3. Dry clean exposed surfaces to remove large particles of mortar using hardwood wood paddles and scrapers. Metal tools not acceptable.
4. Presoak exposed masonry surfaces by saturating with water and flush off loose mortar and dirt.
5. Apply cleaning solutions and clean masonry in accordance with the cleaning material manufacturer's cleaning instructions.
6. Muriatic acid cleaning of masonry not permitted.

H. Architectural Concrete Masonry:
1. Keep ACMU walls clean during installation. Remove excess mortar on daily basis using brushes, rags or burlap squares.
2. Clean completed walls with detergent masonry cleaner recommended by the ACMU manufacturer. Acid cleaning agents, abrasive cleaners, tools or powders and metal cleaning tools and brushes are not permitted.
3. After final clean down and when walls are dry, apply ACMU acrylic finish coating in accordance with ACMU manufacturer's application instructions.

DIVISION 5 - METALS

SECTION 05120 - STRUCTURAL STEEL

1.1 General: Provide structural steel in accordance with the General Structural Notes and structural drawings and details.

A. Standards: Materials and construction shall conform to following:
1. AISC "Specification for the Design, Fabrication, and Erection of Structural Steel for Buildings."
2. AISC "Code of Standard Practice."
3. AWS "Structural Welding Code, D1.1-Steel."

2.1 Materials:

A. Materials compliance: When requested, submit acceptable data documenting materials compliance for each type of material required.

B. Structural Shapes: ASTM A36/A36M, 36 ksi steel.

C. Tubular Steel: ASTM A500, 46 ksi yield strength steel, cold-formed welded and seamless.

D. Structural pipe: ASTM A53, type and grade selected by the fabricator as required for design loading, standard finish, standard weight (Schedule 40) except as otherwise indicated.

E. Grout: ASTM C1107, pre-mixed, shrinkage resistant, non-metallic, non-corrosive, non-staining grout.

F. Shop paint primer: Refer to Section 09900 - Paints and Coatings.

G. Fabrication: Fabricate structural steel in accordance with AISC "Specification - Structural Steel for Buildings" and "Code of Standard Practice." Provide welded or bolted connections in accordance with the Structural Drawings connection requirements.
1. Welding: Conform to AWS welding standards. Provide only continuous welds, spot welding is not acceptable. Grind all exposed welds smooth.
2. Splicing: Material, if spliced, shall have maximum one splice per structural member. Perform splicing by full penetration butt-welding using AWS qualified welders and welding methods.
3. Shop painting: Shop paint structural metal members, except members or portions of members to be embedded in concrete or masonry, surfaces and edges to be field welded and galvanized surfaces. Refer to Section 09900 - Paints and Coatings.

3.1 Installation:

A. Erection: Erect structural steel in accordance with AISC "Specification - Structural Steel for Buildings" and "Code of Standard Practice".
1. Plumb, level and align base plates for structural members with steel shims.
2. Grout structural steel base plates solid that bear on concrete or masonry surfaces.

B. Testing: When required, comply with drawings testing requirements.

SECTION 05400 - COLD-FORMED METAL FRAMING

1.1 General: Provide cold-formed metal framing in accordance with the General Structural Notes and structural drawings and details.

A. Standards: Materials and construction shall conform to following:
1. AISI SG02.2-01 "Design of Cold-Formed Steel Structural Members."
2. AWS "Structural Welding Codes, D1.3-Sheet Steel."

2.1 Materials:

A. Materials compliance: When requested, submit acceptable data documenting materials compliance for each type of material required.

B. Load-Bearing Cold-Formed Metal Framing: ASTM A1003, Gage, Grade and Type indicated.
1. Components: Provide sizes and shapes indicated.
2. Finish: Galvanized complying with ASTM A653, minimum G60 coating.

C. Fabrication:
1. Cold-formed metal framing may be prefabricated into panels before erection. Fabricate panels plumb, square, true to line and braced against racking with joints welded.
   a. Provide one-piece full-length cold-formed metal framing members. Splicing not permitted.
2. Attach and join other components by welding or screw fasteners, as indicated. Wire tying of framing components is not permitted.
3. Cut framing to fit squarely for attachment to perpendicular members or as required for angular fit against abutting members. Hold members securely in position until properly fastened.
4. Saw cut field cut framing. Torch cutting not acceptable.

3.1. Installation:

A. Erection: Erect cold-formed metal framing members of gage and at spacing indicated on the Structural Drawings. Align and secure studs to top and bottom runner tracks by welding or screw fasteners at both inside and outside flanges.

B. Tolerance Acceptance: Install cold-formed metal framing member as indicated on the plans. Install to 1/16" tolerance.

SECTION 05500 - METAL FABRICATIONS
1.1 General: Provide metal fabrications as shown and specified.
A. Submit shop drawings for the following:
1. Patio Rail systems.
   a. Show thickness, size, construction and manner of assembling various members, joint locations and railing layout.
   b. Show true profiles, connections and relationship to adjoining work and methods of anchoring.

2.1 Materials
A. Materials compliance: When requested, submit acceptable data documenting materials compliance for each type of material required.
B. Steel Shapes: ASTM A36/A36M, 36 ksi steel.
C. Stainless Steel:
1. Wall: 18 gage, ASTM A167, AISI Type 304 stainless steel, No. 4 finish.
D. Diamond Plate: Nominal 1/8" thick ASTM B209, Alloy 6061-T6, Aluminum Diamond Tread Plate.
1. Wall: Bright reflective finish.
2. Floor: Mil finish.
E. Patio Railing System
1. Submit shop drawings including the following:
   a. Show thickness, size, construction and welding, as well as assembly drawings.
   b. Show true profiles, connections of all typical joint configurations
   c. Show installation (fastening) and proposed grout (non-gypsum base)
   d. Show gate detail and gate hardware manufacturer and model number
   e. Patio railing plan, with dimensions and panel assembly locations.
2. Fabrication
   a. Patio rails and gate shall be fabricated from steel flat bar, 3/8" x 2 1/2", grade A36.
   b. Corner connector angles shall be 2 1/2" x 2 1/2" x 1/4" steel L angle.
   c. Gate hinges shall be a self-closing, adjustable tension type. Hinge installation shall be drilled and tapped. Permanently welded are unacceptable.
   d. Gate stop shall have a rubber cushion stop and be affixed to the active gate.
   e. All corners and joints shall be seal welded and outside joints ground smooth.
   f. All welding spatter shall be removed before sand blasting.
3. Finish
   a. Patio railing shall be painted PPG Durethane, color 518-6 Knight's Armor. Refer to Section 09900 - Paints and Coatings for preparation.
F. Exposed Fasteners:
1. Diamond Plate: #8 x 1" bevel headed stainless steel screw.
2. Patio Railing:
   a. All fasteners shall be stainless steel and powder coated to match railing sections.
   b. Spacer washers separating railing sections shall be 1 1/2" diameter and 1/2" thick they shall be one piece thick washers and not comprised of stacking washers
   c. Spacer washers shall be used on all straight sections and when railing panels join at 90 degree corner angles.
G. Shop paint primer: Refer to Section 09900 - Paints and Coatings
3.1 Installation: Comply with the Architectural Drawing details and the following:
A. Exposed Fasteners:
1. Flat Metal Panels: Provide 18" vertical and horizontal pattern or spaced equally if 18" pattern does not finish evenly. Exposed fasteners shall remain unpainted in natural factory supplied finish.
2. Diamond Plate: Provide counter sunk fasteners at perimeter of panels at 2'-0" on center maximum as well as fully adhering to surface.
B. Stainless Steel:
1. Wall:
   a. Clean stainless steel panel with mineral spirits.
   b. Install stainless steel panels with Henry 117 oil based adhesive applied to wall with 1/8" notch tooth trowel.
   c. Trim seams as indicated on the Drawings. No exposed fasteners.
C. Diamond Plate:
1. Wall: Mount over plywood substrate w/ flush exposed fasteners.
2. Floor: Provide continuous bead of silicone sealant to back side perimeter of plate prior to installation.
3. Mount with exposed fasteners. Provide continuous bead of silicone sealant to perimeter of plate after installation.
D. Patio Railing System:
1. Railing posts shall be set 6" deep into a core drilled hole, 4"-6" diameter
2. Railing posts shall be grouted in using non gypsum quick set grout.
3. Railing posts shall be set in grout plumb and level, with a tolerance of 1/8" in 4 feet.
E. Hand-inspect all joints and edges of installed metal materials. Unless otherwise indicated, fit exposed connections accurately together to form tight hairline joints. Grind and ease exposed joints, and edges smooth and free of burrs.

DIVISION 6 - WOOD AND PLASTICS SECTION

06100 - ROUGH CARPENTRY

1.1 General: Provide rough carpentry work as shown and specified.

A. Standards: Materials and construction shall conform to following:
1. NIST PS-1-95 "Construction and Industrial Plywood."
2. NIST PS-2-95 "Performance Standards for Wood-Based Structural-Use Panels."
3. NIST PS-20-99 "American Softwood Lumber Standard."
4. NF&PA NDS-97 "Wood Construction and Supplement."
5. AWPA "Wood Treatment Standards."

2.1 Materials:

A. Lumber: Factory grade-marked, dressed, seasoned dimension lumber, S4S, air-dried, maximum 19% moisture content complying with PS-20, dimensions indicated.
1. Blocking, nailers and similar members: Standard Grade Western Dimension Lumber or Southern Pine species.
   a. Provide preservative treated lumber, where indicated.

B. Plywood: Factory grade-marked, complying with PS-1, square edge, 5/8" thick.
1. APA-RATED SHEATHING EXP1.
   a. Provide Exterior Grade (EXT) plywood, where indicated.
   b. Provide fire-retardant treated plywood, where required by Building Code.

C. Oriented Strand Board (OSB): Factory grade-marked, complying with PS-2, square edge, 5/8" thick

2.2 Wood Treatment:

A. Preservative Treatment: Comply with applicable requirements of AWPA Standards C2 (Lumber).
1. Pressure preservative treat lumber with water-borne preservatives, acceptable to authorities having jurisdiction, to a minimum retention of 0.25 pcf.
2. Treat wood blocking, nailers and similar members in connection with roofing and flashing.
3. Treat wood plates, blocking, furring and similar concealed members in contact with masonry or concrete.

B. Fire-Retardant Treatment: Comply with applicable requirements of AWPA Standards C27 (Plywood). Identify "fire-retardant-treated plywood" with appropriate UL classification marking.
1. Treated materials shall meet "Interior Type A" FR-S ratings of not more than 25 for flame spread, smoke developed and fuel contributed when tested in accordance with UL 723 or ASTM E84, with no increase in flame spread and evidence of significant progressive combustion upon continuation of test for additional 30 minutes.

C. Kiln-dry all treated lumber and plywood materials after treatment to maximum 15% moisture content.

3.1 Installation:

A. Lumber: Provide wood blocking, nailers and similar members where shown and where required for attachment of other work and surface applied items. Attach to substrate as required to support applied loading.
1. Use only sound, seasoned materials of longest practical lengths and sizes to minimize joints.
2. Use materials free of warp. Make tight connections between members.

SECTION 06210 - FINISH CARPENTRY AND MILLWORK

1.1 General: Provide finish carpentry and millwork as shown and specified.

A. Standards: Materials and construction shall conform to the following:
1. AWI "Architectural Woodwork Quality Standards - 1999."

B. Doors and door hardware: Install all door hardware furnished under Division 8 specification Sections.

C. Submit shop drawings for designated millwork.
1. Include complete details, materials lists and drawings showing fabrication of typical units, unit assemblies, locations and installation details.
2. List proposed cabinet hardware to suit indicated unit use or function.
3. Identify materials required to complete work ready for installation.
4. Obtain shop drawing approval before starting fabrication.

2.1 Materials:

A. Plywood: AWI Section 200
1. Concealed use substrates: D-3 Paint Grade hardwood plywood, with aspen veneer core, 3/4" thick.
2. Exposed to view finishes: Plumb Creek, AC Sanded Face Exterior Fir plywood, 23/32" thick by 4'-0" by 8'-0". Pressure treated with d-blaze to meet Class A fire rating, where required.

B. Millwork: Materials and construction as detailed on the Drawings.

C. Fabrication:
1. Millwork design and fabrication details shown on the drawings indicate design intent. Unless otherwise indicated, provide manufacturer's standard fabrication methods. Indicate all proposed variations from the drawing design and fabrication details on shop drawings.
2. Fabricate millwork in accordance with AWI "Custom Grade" requirements. Where details are not shown, comply with applicable Quality Standards or with alternate details acceptable to Architect as fabricator's option.
   a. All shop joints made with standard construction adhesive glued under pressure.
3. Fabricate finished work properly framed, closely fit and accurately set to required lines and levels and rigidly secured in place.
4. Fabricate work straight, plumb, level and in true alignment; neatly and accurately fit, scribed and thoroughly secured. Plane and sand miters and other joints. Ease all square edges. Provide millwork clean and free from warp, twist, open joints and other defects.
5. Provide finished woodwork dressed and sanded free from machine and tool marks, abrasions, raised grain or other defects on surfaces exposed to view in finished work.

D. Finish: Provide exposed to view plywood shop finished with clear dull sheen ML Campbell Krystal conversion varnish. Apply two coats with scuff sanding in between. All cuts in field are to be sanded smooth and finished with clear dull sheen ML Campbell High Performance Pre-Cat Lacquer. Apply two coats with scuff sanding between.

3.1 Installation

A. Install finish carpentry and millwork products plumb, level, true and straight with no distortion. Shim as required using concealed shims. Install to a tolerance of 1/8" in 8'-0" for plumb and level (including countertops) and with 1/16" maximum offset in flush adjoining surfaces, 1/8" maximum offsets in revealed adjoining surfaces.
1. Scribe and cut finish carpentry and millwork products to fit adjoining work.
2. Anchor finish carpentry and millwork items to built-in place blocking, furnished under
3. Section 06100, or directly attach to substrate framing. Secure to grounds, blocking and nailers with countersunk, concealed fasteners and blind nailing as required for a complete installation. Use finish nails for exposed nailing, countersunk and filled flush with woodwork and matching final finish where clear finish is indicated.
4. Touch-up shop finished plywood materials marred or damaged during delivery, storage and installation with custom blended polyurethane to equal Minwax "Wipe on Poly". Install casework without distortion so that doors and drawers will fit openings properly and be accurately aligned.

B. Adjust hardware to center doors and drawers in openings and to provide unencumbered operation.
C. Install plastic laminate countertops, shelving and trim. Provide work level, true to alignment, accurately fit to wall conditions and securely fastened to base units and other support systems as indicated.

SECTION 07210 - BUILDING INSULATION

1.1 General: Provide building insulation as shown and specified.

2.1 Materials:

A. Extruded polystyrene foam rigid board insulation: Dow Chemical Co., 866-583-2583, internet www.dowbuildingmaterials.com
1. Type: Dow "Styrofoam" Type IV, 1.6 pcf minimum density, 25 psi compressive strength complying with ASTM C 578, R-value equal 5 per inch of thickness. Provide lengths and widths as required to coordinate with space insulated.
2. Perimeter foundation walls: Styrofoam SE, R-value indicated/2" thickness.

B. Glass fiber batt/blanket insulation: Owens Corning Corp., (800) 438-7465, internet www.owenscorning.com.
1. Type: Owens Corning " Thermal Batt" Type I unfaced glass fibers and binders formed into flexible blankets or batts complying with ASTM C665,. Provide lengths and widths required to coordinate with spaces insulated.
2. Exterior walls: Unfaced, R-value/thickness indicated

C. Vapor barrier membrane: Polyethylene, minimum 6 mils thick, complying with ASTM D 4397, maximum permeance rating of 0.13 perm.
1. Joint tape: Pressure sensitive tape designed for sealing joints and penetrations of above and below grade vapor barrier sheets.
2. Mounting tape: Double-faced pressure sensitive tape suitable for mounting vapor barriers to steel framing.

3.1 Installation:

A. General: Install insulation in accordance with manufacturer's recommendations for conditions of installation indicated.
1. Install insulation in single layer of required thickness over entire area to be insulated. Cut and fit tightly around obstructions. Fill all voids.
2. Install exterior wall insulation continuous behind electrical boxes, conduit, piping and ductwork.

B. Exterior Walls:
1. Install batt/blanket insulation full height at exterior wall framing. Use blanket widths and lengths that fill cavities formed by framing members and provide a friction fit between edges of insulation and metal framing members.
2. Provide galvanized wire mesh or metal strapping to provide supplementary support when required to maintain insulation in permanent proper location.

C. Vapor Barriers:
1. Install a single layer of vapor barrier membrane over the interior of exterior metal wall framing after installation of insulation. Secure with double faced tape at wall framing.
2. Provide single unspliced material height. Horizontal joints not acceptable. Minimize vertical joints. Lap vertical joints and secure in place with joints taped. Provide tape sealed contact with door frames, window frames, piping, conduit, ductwork, registers and the vapor barrier.
3. Seal all cuts and penetrations of vapor barrier membrane with tape before installing surface finishes.

SECTION 07250 - WEATHER BARRIERS

1.1 Section Includes

A. Weather barrier membrane
B. Seam Tape
C. Flashing
D. Fasteners

1.2 References

A. ASTM International
1. ASTM C920; Standard Specification for Elastomeric Joint Sealants
2. ASTM C1193; Standard Guide for Use of Joint Sealants
3. ASTM D882; Test Method for Tensile Properties of Thin Plastic Sheeting
4. ASTM D1117; Standard Guide for Evaluating Non-woven Fabrics
5. ASTM E84; Test Method for Surface Burning Characteristics of Building Materials
6. ASTM E96; Test Method for Water Vapor Transmission of Materials
7. ASTM E1677; Specification for Air Retarder Material or System for Framed Building Walls.
8. ASTM E2178; Test Method for Air Permeance of Building Materials

B. AATCC - American Association of Textile Chemists and Colorists
1. Test Method 127 Water Resistance: Hydrostatic Pressure Test

C. TAPPI
1. Test Method T-410; Grams or Paper and Paperboard (Weight per Unit Area)
2. Test Method T-460; Air Resistance (Gurley Hill Method)

1.3 Quality Assurance

A. Qualifications
1. Installer shall have experience with installation of commercial weather barrier assemblies under similar conditions.
2. Installation shall be in accordance with weather barrier manufacturer's installation guidelines and recommendations.
3. Source Limitations: Provide commercial weather barrier and accessory materials produced by single manufacturer.

1.4 Delivery, Storage and Handling

A. Refer to Section 01400 Quality Requirements.

B. Deliver weather barrier materials and components in manufacturer's original, unopened, undamaged containers with identification labels intact.

C. Store weather barrier materials as recommended by weather barrier manufacturer.

1.5 Scheduling

A. Review requirements for sequencing of installation of weather barrier assembly with installation of windows, doors, louvers and flashings to provide a weather-tight barrier assembly.

B. Schedule installation of weather barrier materials and exterior cladding within nine months of weather barrier assembly installation.

2.1 Manufacturer

A. DuPont Building Innovations; 4417 Lancaster Pike, Chestnut Run Plaza 721, Wilmington, D19805; 1.800.44TYVEK (8-9835); http://constructiontyvek.com

2.2 Materials

A. Basis of Design: Hi-performance, spunbonded polyolefin, non-woven, non perforated, weather barrier is based upon DuPont Tyvek CommercialWrap and related assembly components.

B. Performance Characteristics:
1. Air Penetration: 0.001 CFM/feet squared at 75 Pa, when tested in accordance with ASTM E2178. Type I per ASTM E1677.
2. Water Vapor Transmission: 28 perms, when tested in accordance with ASTM E96 Method B.
3. Water Penetration Resistance: 280 cm when tested in accordance with AATCC Test Method 127.
4. Basis Weight: 2.7 oz/yard squared, when tested in accordance with TAPPI Test Method T-410.
5. Air Resistance: Air infiltration at >1500 seconds, when tested in accordance with TAPPI Test Method T-460.
6. Tensile Strength: 38/35 lbs/inch, when tested in accordance with ASTM D882, Method A.
7. Tear Resistance: 12/10 lbs., when tested in accordance with ASTM D1117.
8. Surface Burning Characteristics: Class A, when tested in accordance with ASTM E 84. Flame Spread: 10, Smoke Developed: 10.

2.3 Accessories

A. Seam Tape: 3 inch wide, DuPont Tyvek Tape for commercial applications.

B. Fasteners:
1. For steel frame construction - DuPont Tyvek Wrap Cap Screws, as manufactured by DuPont Building Innovations: 1-5/8" rust resistant screw with 2-inch diameter plastic cap or manufacturer approved 1-1/4" or 2" metal gasketed washer.
2. For wood frame construction - Tyvek Wrap Caps, as manufactured by DuPont Building Innovations: #4 nails with large 1-inch plastic cap fasteners.
3. For masonry construction - masonry tap-con fasteners with Tyvek Wrap Caps as manufactured by DuPont Building Innovations: 2 inch diameter plastic cap fasteners.

12/3/2025 2:54 PM

FWH Architects
3336 Grand Blvd. Suite 201
Holiday, Florida 34690
Ph. 727. 815. 3336
FABER@FWHARCHITECTS.COM

brightwork real estate
3708 WEST SWANN AVE.
SUITE 200
TAMPA, FL 33609
PHONE: 813.874.1700

TO THE BEST OF THE KNOWLEDGE OF THE ARCHITECT'S AND ENGINEERS, SAID PLANS AND SPECIFICATIONS COMPLY WITH THE APPLICABLE MINIMUM BUILDING CODES AND THE APPLICABLE MINIMUM FIRE SAFETY STANDARDS

GUY F. FABER
FL License No. AR0015323
seal

no.	date	revision descriptions
1		
2		

CHIPOTLE MEXICAN GRILL
BUILDING SHELL

2000 NOLTE ROAD
ST. CLOUD, FLORIDA 34722

08.29.2025
date

25008
comm. no.

ARCHITECTURAL SPECIFICATIONS

G011

C. Adhesives:
1. Provide adhesive recommended by weather barrier manufacturer.
2. Products:
a. Liquid Nails LN-109
b. Polyglaze SM 5700
c. Denso Butyl Liquid
d. 3M High Strength 90
e. SIA 665
f. Adhesives recommended by the weather barrier manufacturer.

D. Primers:
1. Provide flashing manufacturer recommended primer to assist in adhesion between substrate and flashing.
2. Product:
a. 3M High Strength 90
b. Denso Butyl Spray
c. SIA 655
d. Permagrip 105 ITW TACC Sta' Put SPH e.
f. Primers recommended by the flashing manufacturer.

E. Flashing:
1. DuPont FlexWrap, as manufactured by DuPont Building Innovations: flexible membrane flashing materials for window openings and penetrations.
2. DuPont Straightflash, as manufactured by DuPont Building Innovations: straight flashing membrane materials for flashing windows and doors and sealing penetrations such as masonry ties, etc.
3. DuPont Straightflash VF, as manufactured by DuPont Building Innovations: dual-sided straight flashing membrane materials for brick mold and non-flanged windows and doors.

3.1 Examination

A. Verify substrate and surface conditions are in accordance with weather barrier manufacturer recommended tolerances prior to installation of weather barrier and accessories.

3.2 Installation - Weather Barrier

A. Install weather barrier per regional requirements in accordance with manufacturer recommendations.

B. Install weather barrier prior to installation of windows and doors.

C. Start weather barrier installation at a building corner, leaving 6-12 inches of weather barrier extended beyond corner to overlap.

D. Install weather barrier in a horizontal manner starting at the lower portion of the wall surface with subsequent layers installed in a shingling manner to overlap lower layers. Maintain weather barrier plumb and level.

E. Sill Plate Interface: Extend lower edge of weather barrier over sill plate interface 3-6 inches. Secure to foundation with elastomeric sealant as recommended by weather barrier manufacturer.

F. Window and Door Openings: Extend weather barrier completely over openings.

G. Overlap weather barrier
1.1. Exterior corners: minimum 12 inches.
1.2. Seams: minimum 6 inches.

H. Weather barrier Attachment:
1.1. For steel or wood frame construction - Attach weather barrier to studs through exterior sheathing. Secure using weather barrier manufacturer recommended fasteners, space 12-18 inches vertically on center along stud line, and 24 inch on center, maximum horizontally.
1.2. For masonry construction - Attach weather barrier to masonry. Secure using weather barrier manufacturer recommended fasteners, spaced 12-18 inches vertically on center and 24 inches maximum horizontally. Weather barrier may be temporarily attached to masonry using recommended adhesive, placed in vertical strips spaced 24 inches on center, when coordinated on the project site.

I. Apply 4 inch by 7 inch piece of DuPont StraightFlash to weather barrier membrane prior to the installation cladding anchors.

3.3 Seaming

A. Seal seams of weather barrier with seam tape at all vertical and horizontal overlapping seams.

B. Seal any tears or cuts as recommended by weather barrier manufacturer.

3.4 Opening Preparation (for use with non-flanged windows - all cladding types)

A. Flush cut weather barrier at edge of sheathing around full perimeter of opening.

B . Cut a head flap at 45-degree angle in the weather barrier at window head to expose 8 inches of sheathing. Temporarily secure weather barrier flap away from sheathing with tape.

3.5 Flashing (for use with non-flanged windows - all cladding types)

A. Cut 9-inch wide DuPont FlexWrap a minimum of 12 inches longer than width of sill rough opening. Apply primer as required by manufacturer.

B. Cover horizontal sill by aligning DuPont FlexWrap edge within side edge of sill. Adhere to rough opening across sill and up jambs a minimum of 6 inches. Secure flashing tightly into corners by working in along the sill before a adhering up the jambs.

C. Fan DuPont FlexWrap at bottom corners onto face of wall. Firmly press into place. Mechanically fasten fanned edges.

D. Apply 9-inch wide strips of DuPont StraightFlash at jambs. Align flashing with interior edge of jamb framing. Start DuPont StraightFlash at head of opening and lap sill flashing down to the sill.Spray-apply primer to top 6 inches of jambs and exposed sheathing. Install DuPont FlexWrap at opening head using same installation procedures used at sill.

E. Overlap jamb flashing a minimum of 2 inches.

F. Coordinate flashing with window installation.

G. On exterior, install backer-rod in joint between window frame and flashed rough framing. Apply sealant at jambs and head. leaving sill unsealed. Apply sealants in accordance with sealant manufacturer's instructions and ASTM C 1193.

H. Position weather barrier head flap across head flashing. Adhere using 4-inch wide DUPont StraightFlash over the 45-degree seams.

I. Tape top of window in accordance with manufacturer recommendations.

J. On interior, install backer rod in joint between frame of window and flashed rough framing. Apply sealant around entire window to create air seal. Apply sealant in accordance with sealant manufacturer's instructions and ASTM C 1193.

3.6 Protection

A. Protect installed weather barrier from damage.

SECTION 072500 - WATER-RESISTIVE AIR BARRIER MEMBRANE

1.1 General: Provide water resistive air barrier membrane as shown and specified.

A. This Specification shall be read as a whole by all parties concerned. Each Section may contain more or less the complete Work of any trade. The Contractor is solely responsible to make clear to the Subcontractors the extent of their Work and coordinate overlapping Work.

1.2 System Description:

A. Supply labor, materials and equipment for a mechanically attached water-resistive vapor permeable air barrier membrane system, suitable for open joint cladding where designs allow for permanent UV exposure.

B. Complete Work as shown on the Drawings and specified herein to bridge gaps and seal the water-resistive vapor permeable air barrier membrane against air leakage and water intrusion.
1. Connections of the walls to the roof membrane
2. Connections of the walls to the foundations
3. Seismic and expansion joints
4. Openings and penetrations of window and door frames, store front, curtain wall
5. Piping, conduit, duct and similar penetrations
6. Masonry ties, screws, bolts and similar penetrations
7. All other air leakage pathways in the building envelope Install primary water-resistive vapor permeable air barrier, flashings, lap integrated seam tapes, sealants, and all related

C. accessories as required by the manufacturer to achieve a continuous air barrier assembly.

1.3 Related Sections:

A. Masonry : Section 04810

B. Plywood Sheathing: Refer to structural specifications

C. Insulation: Section 07210

D. Roofing: Section 07540

1.4 Reference Standards:

A. American Association of Textile Chemists and Colorists (AATCC): ATCC 127 - Test Method for Water Resistance: Hydrostatic Pressure Test.

B. ASTM International (ASTM):
1. ASTM D 828 - Test Method for Tensile Properties of Thin Plastic Sheeting
2. ASTM E 84 - Test Method for Surface Burning Characteristics of Building Materials
3. ASTM E 96/E 96M - Test Methods for Water Vapor Transmission of Materials
4. ASTM E 283 - Standard Test Method for Determining Rate of Air Leakage Through Exterior Windows, Curtain Walls, and Doors Under Specified Pressure Differences Across the Specimen
5. ASTM E 2178 - Standard Test Method for Air Permeance of Building Materials
6. ASTM E-1677 – Test Method for Type 1 Air Barrier

C. International Code Council Evaluation Service,Inc. (ICC-ES): ICC-ES AC38 - Acceptance Criteria for Water-Resistive Barriers.

1.5 Quality Assurance:

A. Single Source: Water-resistive vapor permeable air barrier membrane components and accessories must be obtained as a single-source membrane system to ensure total system compatibility and integrity.

B. Manufacturer Qualifications
1. Manufacturer of specified products listed in this Section to have minimum 8 years of continued experience in the manufacture and supply of highly vapor permeable water resistive air barrier products successfully installed in similar project applications.
2. Manufacturer of specified products listed in this Section to have experienced in-house technical and field observation personal qualified to provide expert technical support.

C. Fire Performance Characteristics: Provide water-resistive, vapor permeable air barrier meeting the following fire-test characteristics.
1. Surface-Burning Characteristics: ASTM E 84
2. Flame spread index: 25 or less
3. Smoke developed index: 450 or less

1.6 Delivery, Storage and Handling:

A. Refer to current Product MSDS and/or Product Data Sheets for proper storage and handling.

B. Deliver materials to the job site in undamaged and original packaging indicating the name of the manufacturer and product.

C. Store roll materials flat or on end in original packaging. Protect rolls from direct sunlight and inclement weather until ready for use.

1.7 Coordination:

A. Deliver materials to the job site in undamaged and original packaging indicating the name of the manufacturer and product to ensure continuity of the water-resistive vapor permeable air barrier system throughout the scope of this section.

1.8 Warranty:

A. Provide manufacturer's standard material warranty in which manufacturer agrees to provide replacement material for water-resistive vapor permeable air barrier sheets installed in accordance with manufacturer's instructions that fails due to material defects within 20 years of the date of Purchase.

2.1 Materials:

A. Primary water-resistive, vapor permeable, air barrier membrane components and accessories must be obtained at a single-source to ensure total system compatibility and integrity.
1. Water-resistive vapor permeable air barrier membrane by VaproShield LLC., Gig Harbor, WA, Ph (866) 731-7663, Email: info@vaproshield.com, Website: www.vaproshield.com.

B. Water-Resistive Vapor Permeable Air Barrier Materials (Basis of Design):
1. Primary water-resistive air barrier sheet membrane shall be RevealShield™ Water-Resistive Vapor Permeable Air Barrier Sheet by VaproShield, a zero VOC mechanically attached water-resistive, vapor permeable air barrier sheet membrane consisting of multiple layers of UV stabilized material with integrated tape at horizontal seams, having the following properties:
a. Color: Black with allowable UV exposure for 180 days total before being covered by cladding
b. Air Leakage: < 0.00004 cfm/sq.ft. (0.0002 L/s/sq.m) when tested in accordance with ASTM E 2178 and < 0.000034 cfm/sq.ft. (0.00017 L/s/sq.m) when tested in accordance with ASTME 283
c. Water Vapor Permeance tested to ASTM E 96 Method B: 42 perms (262.6 g/m2)
d. Water Resistance tested to AATCC 127, 550 mm hydrostatic head for 5 hours: No leakage
e. Tensile Strength tested to ASTM D 828: 44.8 lbf/inch (68 N/mm), machine direction; 21.3 lbf/inch (37.3 N/mm), cross-machine direction
f. Application Temperature: No temperature restrictions
g. Surface Burning Characteristics tested to ASTM E 84: Class A, Flame-spread index of less than 10, Smoke-development index of less than 135
h. Physical Dimensions: 0.020 inches (0.51 mm) thick and 59 inches (1.5 m) wide and 5 oz per sq. yd. (170 g/sq. m).

C. Water-Resistive Air Barrier Sheet Membrane Fasteners:
1. Water-resistive air barrier sheet membrane fasteners shall be corrosion-resistant or stainless steel screws of #6, 7, or 8, bugle-head design.
2. Screw head caps for water-resistive air barrier sheet membrane shall be VaproCaps by VaproShield, a 1¼ inch diameter preformed head caps with a center throat hole that seals the membrane at the fastener penetration, specifically designed and tested to withstand wind loads and protect against water intrusion at screw penetrations.
3. Selection of fastener thread type is subject to sheathing board and substrate type. Manufacturer recommends subcontractor to supply and place corrosion-resistant or stainless steel screws sized to penetrate gypsum sheathing board through to solid backing or steel studs or wood sheathing by ¾ inch in conjunction with preformed screw head caps.

D. Water-Resistive Air Barrier Seam and Joint Sealant:
1. Water-resistive air barrier sealant compatible with sheet membrane shall be Dow Corning® 758, a modified silicon-based Sealant tested for compatibility with VaproShield products.

E. Water-Resistive Air Barrier Transition and Flashing Membranes:
1. Mechanically attached air barrier transition and flashing membrane shall be RevealFlashing™ by VaproShield, a Black, highly UV stable, zero VOC mechanically attached water-resistive vapor permeable membrane having the following properties:
a. RevealFlashing™: 6 1/2 inches or 11 3/4 inches wide x 164 feet long b.Air Leakage: < 0.0000263 cfm/sq. ft. @ 75 Pa (0.000134 L/s/m sq @ 75 Pa) when tested in accordance with ASTM E 2178
b. Water Vapor Permeance tested to ASTM E 96 Method B: 42 perms (2875ng/Pa.s.m2)
c. Water Resistance tested to AATCC 127, 550 mm hydrostatic head for 5 hours: No leakage

F. VaproLiqui-Flash™ Vapor Permeable Water Resistive Flashing for Rough Openings:
1. Window and door flashing shall be VaproLiqui-Flash by VaproShield, a liquid-applied vapor permeable air barrier flashing material with vapor permeance and resistance to air leakage properties compatible with the primary air barrier membrane

G. Water-Resistive Flashing and Penetration Tapes:
1. Tapes shall be VaproTape™ by VaproShield: UV stable, single sided, moisture-resistant flexible tape with adhesive backing, tested for compatibility with VaproShield products, having the following properties:
a. VaproTape UV-Resistant Black: 35 mil thick by 4 inches (102 mm) wide penetration seam tape.
b. VaproAlumaTape: 20 mil thick by 4.5 inches (114 mm) and 9 inches (229 mm) wide, foil faced, UV stable, moisture-resistant flashing and membrane transition tape for use with silicone sealants.

H. Water-Resistive Weather Barrier Batten and Ventilation Accessories:
1. Water-resistive weather barrier batten and ventilation accessories by VaproShield shall be made of black PVC material
a. VaproBattenTM: Black vinyl extrusion with pre-formed fastener and moisture drainage channels configured to create a ventilated airspace between wall cladding and weather-resistive barrier. VaproVent™ L Strip and VaproVent™ Hook Strip are not necessary in typical open joint cladding systems.

2.2 Penetration Sealant:

A. Provide sealant for penetrations as recommended by manufacturer and as specified under Division 07 Section: Sealants. Appropriate sealants shall be Dow 758 or VaproLiqui-Flash.

3.1 General:

A. Verify that surfaces and conditions are ready to accept the Work of this section. Notify architect in writing of any discrepancies. Commencement of the Work or any parts thereof shall mean acceptance of the prepared substrates.

B. All surfaces must be sound, clean and free of oil, grease, dirt, excess mortar or other contaminants detrimental to the adhesion of the water resistive air barrier flashings. Fill voids, gaps in substrate to provide an even surface. Strike masonry joints full-flush.

C. Minimum application temperature self-adhered membrane flashings to be above 20 degrees F (minus 6.0 degrees C).

D. Ensure all preparatory Work is complete prior to applying primary water-resistive weather barrier membrane.

E. Mechanical fasteners used to secure sheathing boards or penetrate sheathing boards shall be set flush with sheathing and fastened into solid backing.

F. Install per manufacturers installation instructions.

3.2 Protection:

A. Protect wall areas covered with primary water-resistive vapor permeable air barrier from damage due to construction activities, high wind conditions, and extended exposure to inclement weather.

B. Review condition of water-resistive weather barrier prior to installation of cladding. Repair, or remove and replace damaged sections with new membrane.

C. Recommend to cap and protect exposed back-up walls against wet weather conditions during and after application of membrane, including wall openings and construction activity above completed primary water-resistive weather barrier installations.

D. Remove and replace water-resistive vapor permeable air barrier affected by chemical spills or surfactants.

SECTION 07540 - THERMOPLASTIC MEMBRANE (PVC) ROOFING

1.1 General: Provide the thermoplastic membrane (PVC) roofing system as shown and specified.
A. Standards: Materials and construction shall conform to following:
1. ASTM D5036 "Application of Adhered Poly (Vinyl Chloride) Sheet Roofing."
2. FM 1-29 Loss Prevention Data Adhered or Mechanically Attached Single Ply Membrane Roof Systems."
3. NRCA "Single-Ply Roofing Membrane."
4. UL "790 - Tests for Fire Resistance of Roof Covering Materials."
B. Installer Qualifications: An experienced roofing installer approved by roofing system manufacturer and with not less than five years of successful experience installing membrane roofing systems similar to those required for this project.
C. Deliver, store and handle roof system materials in accordance with manufacturer's recommendations to avoid damage and deterioration.
1. Comply with manufacturer's recommendations for handling and protection during installation.
D. Install roofing work only when weather conditions comply with Manufacturer's specific environmental requirements and conditions will permit work to be performed in accordance with manufacturer's recommendations and warranty requirements.
1. Protect adjacent materials and surfaces from damage and soiling during roofing system installation.
2. Provide special protection on completed roofing work.
3. Protect paving and structure walls adjacent to hoists before starting work.
4. Do not overload the building structure with storage of materials or installation equipment on the substrate decking.
E. Warranty
1. Contractor and roof system installer shall jointly warrant roofing materials and installation for a period of two years from the date of Substantial Completion. Warranty shall include roofing membrane, flashing, roof insulation, roofing accessories and sheet metal work provided under Section 07600.
2. Manufacturer's warranty: Submit executed copy of roofing system manufacturer's 15 year total system warranty, including labor and materials for the entire roof system. Including perimeter edge metal, Section 07600 Flashing & Sheet Metal

2.1 Materials
A. Manufacturer: Duro-Last Roofing, Inc, (800) 248-0280, Jason Dark, www.duro-last.com
B. Thermoplastic single ply membrane roofing system: DL Membrane (PVC) fully adhered, smooth surface, UL Class A fire-rated single ply membrane roofing system.
1. Thermoplastic membrane: DL Membrane, thermoplastic fiber reinforced PVC membrane, not less than 40 mils (.040), complying with ASTM D4434 and membrane manufacturer's published physical properties.
C. The roof covering design must resist a wind load in accordance with current Florida Building Code and Local Design requirements and shall resist impact damage based on results of tests based on the results of tests conducted in accordance with ASTM D 3746, ASTM D 4272, CGSB 37-GP-52M or FM 4470. Basis of Design: FL 31331 System S-22, MDP -67.5. Perimeter and Corner areas shall comply with the enhanced uplift pressure requirements of these areas. Fastener densities shall be increased, as calculated in compliance with Roofing Application Standard RAS 117 and/or Roofing Application Standard RAS 137 by a qualified design professional.
1. Insulation cover board:
US Gypsum Securock Gypsum-fiber Roof Board ½" thickness.
2. Roof insulation: Rigid closed cell polyisocyanurate boards approved by the membrane manufacturer; complying with ASTM C1289, Type II, minimum 20 psi compressive strength, aged R-value equal 5.6 per inch of thickness.
a. Provide a double layer installation. Minimum total R-value as indicated on plans.
b. Specified perimeter edge metal shall be compliant with International Building Code ANSI / SPRI ES-1, ER2 testing requirements.
3. Flashing: Roof system manufacturer's standard sheet flashing of same material, type, and color as sheet membrane. Specified perimeter edge metal will be compliant with International Building Code ANSI / SPRI ES-1, RE2 testing requirements.
4. Membrane Bonding Adhesive: Duro-Last WB II Adhesive
5. Fasteners: Roof system manufacturer's standard fasteners for project conditions indicated.
6. Accessories: Roof system manufacturer's recommended pourable sealers, preformed penetration flashing, preformed corner flashing, seam caulk, termination bars and other accessories required for substrate surfaces and installation conditions indicated.
7. Traffic walkways: Duro-Last Roof Track III walkway pads.
3.1 Installation
A. Preparation:
1. Clean substrate surfaces of debris and other substances detrimental to roofing installation.
2. Correct unsatisfactory conditions before starting roofing. Roof deck surface conditions shall comply with manufacturer's requirements and be acceptable to the roofing system installer.
B. Installation:
1. General: Provide roofing system materials and installation complying with roofing system manufacturer's instructions and governing codes and regulations.
2. Roof insulation and Cover board.
a. Extend insulation full thickness over entire surface to be insulated. Cut and fit around obstructions; fill all voids with insulation. Provide saddles and tapered edges as required to provide positive drainage.
Install a double layer of insulation units of the required thickness. Run long joints of insulation in continuous straight lines, perpendicular to roof slope, with end joints staggered between rows. Stagger joints of each layer of insulation. Butt edges to moderate contact. Limit joints between adjacent units to maximum 1/4".
b. Install Securock cover board, secure in place with insulation mechanical fasteners all layers of insulation and cover board. Secure in accordance with membrane manufacturer's recommendations. Stagger joints with joints of roof insulation.
3. Thermoplastic membrane: Comply with membrane manufacturer's instructions and recommendations for handling and installing single ply membrane roofing.
a. Unroll and position roofing sheet membrane without stretching. Align top sheet with pre-marked lines on bottom sheet. Allow membrane to "relax" for at least 30 minutes before adhering, splicing and flashing.
b. Adhere membrane to insulation cover board with bonding adhesive. Broom bonded membrane to achieve maximum contact.
c. Join membrane seams using approved heat welding equipment. Check all splices for voids and repair voids with heat gun and roller.
d. When required, mechanically fasten membrane at roof perimeter, curb flashing and similar penetrations in accordance with manufacturer's installation instructions.
e. Flash and make weathertight all equipment curbs, pipes, conduits, drains and other penetrations or projections through sheet roofing using roofing system manufacturer's recommended flashing materials, accessories and procedures.
4. Install roof accessories and traffic walkways in accordance with manufacturer's instructions.
5. Install sheet metal work furnished under section 07600.

SECTION 07600 - FLASHING AND SHEET METAL
General:
A. Standards: Materials and construction shall conform to following:
1. SMACNA "Architectural sheet Metal Manual- 1993."
B. Installation: Performed under Section 07540 work.
1.1 Pre-manufactured perimeter edge metal and accessories
A. Duro-Last / Exceptional Metals 2 Piece Compression Metal System Base and cover made of 24-gauge galvalume, Cover provided with a Kynar architectural finish providing a 35 year finish warranty.Meets ANSI/SPRI ES-1 2003 method RE-2 testing requirements. (Color - Charcoal Gray, White)
B. Duro-Last / Exceptional Metals Vinyl backed scupper. Scupper profile & size indicated Fig 1-20.
1.2 General: Miscellaneous sheet metal
A. Standards: Materials and construction shall conform to following:
1. SMACNA "Architectural sheet Metal Manual- 1993."
B. Installation: Performed under Section 07540 work.
2.1 Materials:
A. Galvanized steel: ASTM A653 commercial quality sheet steel with 0.2% copper, G90 hot-dip galvanized. Gage indicated.
1. Scuppers: Minimum 16 gage.
2. Coping/Wall caps: Minimum 18 gage.
B. Aluminum sheet: ASTM B209 alloy 3003, temper as required for forming and performance. Thickness indicated.
1. Conductor Boxes: Minimum 0.040"thickness.
2. Downspouts: Minimum 0.025"thickness.
C. Joint sealers: One-component silicone elastomeric joint sealant complying with ASTM C920. Color matched to sheet metal finish.
D. Metal accessories: Provide sheet metal fasteners, clips, straps, anchoring devices and similar accessory units as required for installation of work, matching or compatible with material installed, non-corrosive, size and gage as required for performance and acceptable to the Architect.
E. Fabrication: Shop fabricate sheet metal work to comply with profiles and sizes indicated and to comply with standard industry standards as shown by SMACNA in the "Architectural Sheet Metal Manual."
1. Conductor boxes: SMACNA Chapter 1 - Roof Drainage Systems. Profile and size indicated Fig 1-25.
2. Scuppers: SMACNA Chapter 1 - Roof Drainage Systems. Profile and size indicated Fig 1-20.
3. Downspouts: SMACNA Chapter 1 - Roof Drainage Systems. Profile and size indicated. Installation Fig. 1-31 with strap hanger Fig. 1-35.
4. Formed coping/wall caps: SMACNA Chapter 3 - Copings. Design Fig 3-1. Profile and size indicated with Fig. 3-3 butt joints and concealed back-up plates. Install formed copings with continuous cleat fasteners similar to Fig 3-1 at exposed face and screw fasteners with washers space maximum 24" on center at roof side.
3.1 Installation:
A. Preparation: Coordinate sheet metal work with other work for the correct sequencing of items which make up the entire roof system of weatherproofing and rain drainage:
B. Installation: Comply with SMACNA "Architectural Sheet Metal Manual" recommendations, drawing details and approved shop drawings for installation of the work.
1. Anchor sheet metal items securely in place by methods indicated, providing for thermal expansion. Conceal fasteners and expansion provisions whenever possible. Install joint sealants where required.
1. Set units true to lines and levels indicated. Install work with sealed laps, joints and seams that will be permanently watertight and weatherproof. Bed flanges of sheet metal work in thick coat of roofing cement or sealant compatible with roofing membrane.
2. Separate sheet metal work from dissimilar metals and treated wood materials. Provide rosin-sized paper slipsheet over treated wood.
3. Fabricate, support and anchor conductor boxes and downspouts to withstand thermal expansion, stresses and full loading by ice or water without damage, deterioration or leakage.

Section 07900 – JOINT SEALERS
1.1 General: Provide joint sealers as shown and specified.
A. Standards:Comply with ASTM C 920 requirements.
B. Application: Performed by skilled, experienced joint sealer applicators.
2.1 Materials:
A. Poly urethane sealants:
1. Tremco Commercial Sealants (800) 321-7906, internet www.tremcosealants.com,
a. "Dymonic FC" One component, fast skinning, Low Modulus Polyurethane.
b. "Dymeric 240 FC" Multi Component, gun grade, chemically curing, tintable fast setting polyurethane sealant.
2. Sonneborn, (724) 756-9582, internet www.sonneborn.com
a. Color pack for polyurethane multi component, gun grade chemically curing sealant.
B. Silicone Sealants:
1. General Electric Silicones, (800) 295-2392, internet www.gesilicones.com
a. "SCS1700 Sanitary – Mold/Mildew Resistant Silicone", one component 100% silicone, fungicidal based sealant.
b. "SCS2700 Silpruf Silicone" one component medium modulus, natural cure silicone all purpose sealant.
c. "Siglaze II SCS2800- Glazing Sealant" one component, 100% silicone based sealer.
d. "GE Paintable Silicone" one component paintable silicone.
2. Dow Corning Silicones, (989)496-4000, www.dowcorning.com
a. "Dow 795" – one component, medium modulus, natural cure silicone.
C. Firestopping Sealants: 3M Fire Protection Products, (800) 328-1687, internet www.3M.com/firstop
1. "3M Fire Barrier CP 25WB+ Caulk" or approved equal
D. Joint backing: Non-absorptive, non-staining compressible, non-gassing, polyethylene foam backer rod compatible with joint sealants.
3.1 Installation:

A. Preparation: Clean and prepare joints prior to installing sealers:
1. Wipe shipping oils from surfaces to be sealed. Remove protective films and/or install joint backer rod if joint is larger than ¼" in width.
B. Installation: Install joint sealant materials in strict accordance with manufacturer's installation instructions.
1. Apply sealants in a uniform, continuous bead without gaps or air pockets. Hand tool and finish all joints so that a smooth, small, lip free uniform line is created along the substrate being shot. Remove any excess materials from tooled edges and ends of joint.
2. Install joint sealants to a depth no more than ½ the width of the joint.
3. Install sealants by proven techniques that result in sealants directly contacting and fully wetting joint substrates, completely filling recesses provided for each joint configuration, and providing uniform, cross-sectional shapes and depths relative to joint widths which allow optimum sealant movement capability.
4. Immediately, after sealant application, and prior to time skinning or curing begins, tool sealants to form smooth, uniform beads of configuration indicated to eliminate air pockets, and to ensure contact and adhesion of sealant with sides of joint. Remove excess sealants from surfaces adjacent to joint. Do not use tooling agents which discolor sealants or adjacent surfaces or are not approved by sealant manufacturer.
5. Clean off excess sealants or sealant smears adjacent to joints as work progresses by methods and with cleaning materials approved by manufacturers of joint sealers and of products in which joints occur.

4.1 Sealant Schedule:
A. Exterior Joints:
- Provide a continuous bead of Tremco Dymeric limestone urethane sealant at the following locations:
1. Sidewalk/concrete expansion joints.
- Provide a continuous bead of Dow 795 silicone or Tremco Dymeric 240 FC at the following locations:
1. Hollow metal door frames.
2. EIFS to abutting services.
3. Penetrations in EIFS.
4. Face brick or block control joints.
5. Perimeter of Aluminum Storefronts.
*Colors to be determined per store to match adjacent material colors. Verify with Chipotle Construction Manager and Architect. - For white brick or "Delicate White" EIFS use Tremco - "China White" - For "Knight's Armor" EIFS use Sonneborn - "Charcoal Gray" #276-U
- Provide a continuous bead of aluminum GE SCS2800 silicone at the following location:
1. CO2 fill port stainless box.
2. Faucet for hose. (Please note: color to be determined per store. Verify with Chipotle Construction Manager and Architect).

SECTION 04812 THIN BRICK VENEER
PART 1 - GENERAL
1.01 SUMMARY
A. SECTION INCLUDES: THIN BRICK VENEER
1.02 REFERENCES
A. AMERICAN CONCRETE INSTITUTE (ACI).
B. AMERICAN SOCIETY FOR TESTING AND MATERIALS (ASTM):
1. ASTM C 39, STANDARD TEST METHOD FOR COMPRESSIVE STRENGTH OF CYLINDRICAL CONCRETE SPECIMENS.
2. ASTM C 67, STANDARD TEST METHODS FOR SAMPLING AND TESTING BRICK AND STRUCTURAL CLAY TILE.
3. ASTM C 177, STANDARD TEST METHOD FOR STEADY-STATE HEAT FLUX MEASUREMENTS AND THERMAL TRANSMISSION PROPERTIES BY MEANS OF THE GUARDED-HOT-PLATE APPARATUS.
4. ASTM C 192, STANDARD PRACTICE FOR MAKING AND CURING CONCRETE TEST SPECIMENS IN THE LABORATORY.
5. ASTM C 270, STANDARD SPECIFICATION FOR MORTAR FOR UNIT MASONRY.
6. ASTM C 482, STANDARD TEST METHOD FOR BOND STRENGTH OF CERAMIC TILE TO PORTLAND CEMENT.
7. ASTM D 226, STANDARD SPECIFICATION FOR ASPHALT-SATURATED ORGANIC FELT USED IN ROOFING AND WATERPROOFING.
8. ASTM E 2556/ E 2556M STANDARD SPECIFICATION FOR VAPOR PERMEABLE FLEXIBLE SHEET WATER RESISTIVE BARRIERS INTENDED FOR MECHANICAL ATTACHMENT.
1.03 SUBMITTALS
A. SUBMIT FOLLOWING ITEMS:
B. PRODUCT DATA: THIN BRICK AND APPLICATION MATERIALS INCLUDING MORTAR COLOR CHARTS, AND WATER RESISTIVE BARRIER.
C. SAMPLES: PANEL CONTAINING FULL-SIZE SAMPLES OF SPECIFIED MANUFACTURED MASONRY SHOWING FULL RANGE OF COLORS AND TEXTURES COMPLETE WITH SPECIFIED MORTAR.
1. ACTUAL SIZE OF MASONRY SAMPLE APPROXIMATELY 12 BY 12 INCHES (300 BY 300 MM).
D. QUALITY ASSURANCE/CONTROL SUBMITTALS:
1. QUALIFICATIONS:
a. PROOF OF MANUFACTURER QUALIFICATIONS.
b. PROOF OF INSTALLER QUALIFICATIONS.
2. CERTIFICATES: ICC-ES REPORT.
3. TEST REPORTS FOR PHYSICAL PROPERTIES.
4. MANUFACTURER'S INSTALLATION INSTRUCTIONS.
5. FLORIDA PRODUCT APPROVAL NUMBER.
E. FIELD SAMPLES: PROVIDE IN A LOCATION SELECTED BY OWNER SHOWING REPRESENTATIVE SAMPLE OF INSTALLED PRODUCT INCLUDING PENETRATION AND TERMINATION DETAILS, CORNER DETAIL, AND MORTAR COLOR AND TOOLING.
1. MINIMUM SIZE: 4 BY 4 FEET.
2. APPROVED FIELD SAMPLES MAY REMAIN AS PART OF COMPLETED WORK.
1.04 DELIVERY, STORAGE, AND HANDLING
A. FOLLOW MANUFACTURER'S INSTRUCTIONS.
B. STORE MOISTURE-SENSITIVE MATERIALS IN WEATHER PROTECTED ENCLOSURES.
1.05 PROJECT/SITE CONDITIONS
A. ENVIRONMENTAL REQUIREMENTS: MAINTAIN MATERIALS AND AMBIENT TEMPERATURE IN AREA OF INSTALLATION AT MINIMUM 40 DEGREES F (4 DEGREES C) PRIOR TO, DURING, AND FOR 48 HOURS FOLLOWING INSTALLATION.
1.06 WARRANTY
A. SPECIAL WARRANTY: PROVIDE MANUFACTURER'S STANDARD LIMITED WARRANTY AGAINST DEFECTS IN MANUFACTURING FOR A PERIOD OF 50 YEARS FOLLOWING DATE OF SUBSTANTIAL COMPLETION.
1.07 MAINTENANCE
A. EXTRA MATERIALS: FURNISH EXTRA MANUFACTURED STONE MATERIAL IN A VARIETY OF SHAPES AND SIZES IN QUANTITY EQUAL TO THREE PERCENT OF THE INSTALLED STONE.
PART 2 - PRODUCTS
2.01 MANUFACTURER
A. THIN BRICK: ASTM C 216, GRADE SW, TYPE FBS.
1. SIZE: MODULAR, 1/2" X 2 1/4" X 7 5/8"
2. SOLID BRICK WITH EXPOSED SURFACES FINISHED FOR ENDS OF SILLS AND CAPS.
3. SPECIAL SHAPES FOR APPLICATIONS WHERE SHAPES PRODUCED BY SAWING WOULD RESULT IN SAWED SURFACES BEING EXPOSED TO VIEW.
B. MANUFACTURER, STYLE AND COLOR
1. AS INDICATED ON DRAWINGS.
2.02 RELATED MATERIALS
A. LATICRETE INTERNATIONAL, INC., 1 LATICRETE PARK NORTH, BETHANY, CT 06524-3423 USA PHONE 800-243-4788, (203) 393-0010 TECHNICALSERVICES@LATICRETE.COM, HTTP://WWW.LATICRETE.COM/WS/- WWW.LATICRETE.COM/GREEN
1. AIR BARRIER AND WATERPROOFING MEMBRANE: LATICRETE AIR & WATER BARRIER AS MANUFACTURED BY LATICRETE INTERNATIONAL, INC.
2. LATEX PORTLAND CEMENT THIN BED MORTAR: LATICRETE THIN BRICK MORTAR AS MANUFACTURED BY LATICRETE INTERNATIONAL, INC.
A. COLOR: AS SELECTED BY ARCHITECT
3. LATEX PORTLAND CEMENT POINTING MORTAR: LATICRETE MASONRY POINTING MORTAR AS MANUFACTURED BY LATICRETE INTERNATIONAL, INC.
A. COLOR: AS SELECTED BY ARCHITECT
4. EXPANSION AND CONTROL JOINT SEALANT: LATICRETE LATASIL AS MANUFACTURED BY LATICRETE INTERNATIONAL, INC.
A. COLOR: AS SELECTED BY ARCHITECT
B. METAL LATH: 2.5 LB (1.4 KG/M2) GALVANIZED EXPANDED METAL LATH.
C. FASTENERS:
1. INTO METAL STUDS: MINIMUM 7/16 INCH (11.1 MM) HEAD DIAMETER, CORROSION-RESISTANT, SELF-DRILLING, SELF TAPPING, PANCAKE HEAD SCREWS OF SUFFICIENT LENGTH TO PENETRATE 3/8 INCH (10 MM) MINIMUM INTO THE STUD.
2.03 WEEP SCREED AS REQUIRED FOR INSTALLATION OVER FRAMED CONSTRUCTION.
PART 3 - EXECUTION
3.01 EXAMINATION
A. EXAMINE SUBSTRATES UPON WHICH THIN BRICK WILL BE INSTALLED.
B. COORDINATE WITH RESPONSIBLE ENTITY TO CORRECT UNSATISFACTORY CONDITIONS.
C. COMMENCEMENT OF WORK BY INSTALLER IS ACCEPTANCE OF SUBSTRATE CONDITIONS.
3.02 PREPARATION
A. PROTECTION: PREVENT WORK FROM OCCURRING ON THE OPPOSITE OF WALLS TO WHICH THIN BRICK IS APPLIED DURING AND FOR 48 HOURS FOLLOWING INSTALLATION OF THE THIN BRICK.
B. SURFACE PREPARATION: FOLLOW MANUFACTURER'S INSTRUCTIONS DESIGNATED BELOW FOR THE APPROPRIATE TYPE OF MANUFACTURED MASONRY AND SUBSTRATE.
3.03 INSTALLATION
A. INSTALL THIN BRICK PRODUCTS IN ACCORDANCE WITH MANUFACTURER'S INSTALLATION INSTRUCTIONS
B. INSTALLATION INSTRUCTIONS USING GROUTED JOINTS.
3.04 CLEANING
A. CLEAN THIN BRICK IN ACCORDANCE WITH MANUFACTURER'S INSTALLATION INSTRUCTIONS.
3.05 PROTECTION
A. PROTECT FINISHED WORK FROM RAIN DURING AND FOR 48 HOURS FOLLOWING INSTALLATION.
B. PROTECT FINISHED WORK FROM DAMAGE DURING REMAINDER OF CONSTRUCTION PERIOD.
END OF SECTION 04812

12/3/2025 2:54 PM

FWH Architects
3336 Grand Blvd. Suite 201
Holiday, Florida 34690
Ph. 727. 815. 3336
FABER@FWHARCHITECTS.COM

brightwork real estate
3708 WEST SWANN AVE.
SUITE 200
TAMPA, FL 33609
PHONE: 813.874.1700

TO THE BEST OF THE KNOWLEDGE OF THE ARCHITECT'S AND ENGINEERS, SAID PLANS AND SPECIFICATIONS COMPLY WITH THE APPLICABLE MINIMUM BUILDING CODES AND THE APPLICABLE MINIMUM FIRE SAFETY STANDARDS

GUY F. FABER
FL License No. AR0015323
seal

no.	date	revision descriptions
1		
2		

CHIPOTLE MEXICAN GRILL
BUILDING SHELL

2000 NOLTE ROAD
ST. CLOUD, FLORIDA 34722

08.29.2025
date

25008
comm. no.

ARCHITECTURAL SPECIFICATIONS

G012

DIVISION 8 - DOORS AND WINDOWS

SECTION 08110 - STEEL DOORS AND FRAMES

1.1 General: Tenant to provide steel doors and frames as shown and specified.

A. Standards: Materials and construction shall conform to the following:
1. ANSI A250.8-2009 "Specifications for Standard Steel Doors and Frames."
2. ANSI A250.11-01 "Erection Instructions for Steel Frames."
3. SDI 122-99 " Installation for Standard Steel doors and Frames.

B. Manufacturer: A member of the Steel Door Institute (SDI).

2.1 Materials:

A. Steel Doors:
1. Interior: Heavy-duty Level 2, physical performance B, Model 2 seamless construction, ASTM A1008, 18 gage cold-rolled steel face sheets, manufacturer's standard core.
2. Exterior: Extra heavy-duty Level 3, physical performance A, Model 2 seamless construction, ASTM A1008, 16 gage cold-rolled steel face sheets; tops and bottoms closed with flush galvanized steel caps, manufacturer's standard plastic foam insulating core.

B. Steel Frames: ASTM A1008, 16 gage cold-rolled steel.
1. Provide combination buck, jamb and trim type frames for 1-3/4" thick doors, unless otherwise indicated.
2. Interior and exterior frames: Set-up welded type with mitered corners, reinforced, fully seam welded with exposed welds ground smooth.

C. Door and frame fabrication:
1. Provide cutouts for mortised hardware, accurately located and made to fit hardware. Provide closer reinforcement for all doors with surface mounted door closers.
2. Punch frames and factory install rubber door silencers.
3. Provide minimum three anchors of suitable design for each jamb.
4. Provide floor clip on bottom of each jamb. Provide angle spreaders at bottom of each set-up frame.

D. Shop painting: Clean and paint exposed surfaces of steel door and frame units. Apply one baked-on shop coat of rust-inhibitive prime paint in accordance with ANSI A250.10, unless doors and frames are used at the restrooms or as indicated on door hardware and finish schedule. Provide a uniformly finished surface ready to receive finish paint.

3.1 Installation:

A. Install frames plumb, level, rigid, and in true alignment as recommended in ANSI A250.11.

B. Install doors plumb and in true alignment and fastened to achieve the maximum operational effectiveness and appearance as recommended in SDI 122.

SECTION 084113 - ALUMINUM-FRAMED ENTRANCES AND STOREFRONTS

1.1 General: Provide aluminum entrances and storefronts as shown and specified.

1.2 Related Documents:

A. Drawings and general provisions of the Contract, including General and Supplementary Conditions and Division 01 Specification Sections, apply to this section.

B. Standards: Materials and construction shall conform to the following:
1. AAMA SFM-1-87 "Aluminum Storefront and Entrance Manual."

1.3 Summary:

A. Section includes:
1. Storefront Systems
2. Storefront Entry Systems
3. Brake Metal Trim

1.4 Performance Requirements:

A. General Performance: Aluminum-framed storefront system shall withstand the effects of the following performance requirements without exceeding performance criteria or failure due to defective manufacture, fabrication, installation, or other defects in construction;
1. Design Wind Loads: Determine design wind loads applicable to the Project from basic wind speed indicated in miles per hour, according to ASCE 7, Section 6.5, "Method 2-Analytical Procedure," based on mean roof heights above grade indicated on Drawings.
a. Basic Wind Speed (MPH): Determine to meet local codes listed on G000
b. Importance Factor: (1.00)
c. Exposure Category (A, B, C, D): Determine to meet local codes listed on G000

B. Storefront System Performance Requirements:
1. Wind loads: Provide storefront system; include anchorage, capable of withstanding inward and outward wind load design pressures meeting local codes listed on sheet A000.
2. Air Infiltration:
a. Air Infiltration for storefront frame system: The test specimen shall be tested in accordance with ASTM E 283. Air infiltration rate shall not exceed 0.06 cfm/ft. sq. at a static air pressure differential of 6.24 psf.
b. Air Infiltration for storefront entrances: For single acting offset pivot or butt hung entrances in the closed and locked position, the test specimen shall be tested in accordance with ASTM E 283 at a pressure differential of 6.24 psf (300 Pa) for single doors and 1.567 psf (75 PA) for pairs of doors. A single 3'0" x 7'0" entrance door and frame shall not exceed 0.50 cfm per square foot. A pair of 6'0" x 7'0" entrance doors and frame shall not exceed 1.0 cfm per square foot.
3. Water Resistance: The test specimen shall be tested in accordance with ASTM E 331. There shall be no leakage at a minimum static air pressure differential of 8 psf as defined in AAMA 501.
4. Uniform Load: A static air design load of 20 psf shall be applied in the positive and negative direction in accordance with ASTM E 330. There shall be no defection in excess of L/175 of the span of any framing member. At a structural test load equal to 1.5 times the specified design load, no glass breakage or permanent set in the framing members in excess of 0.2% of their clear spans shall occur.
5. Thermal Transmittance (U-factor): When tested to AAMA Specification 1503, the thermal transmittance (U-factor) shall be not more than:
a. Glass to Exterior - 0.47 (low-e)
6. Condensation Resistance (CRF): When tested to AAMA Specification 1503, the condensation resistance factor shall not be less than:
a. Glass to Exterior - 70 frame and 69 glass (low-e)
7. Sound Transmission Class (STC) and Outdoor-Indoor Transmission Class (OITC): When tested to AAMA Specification 1801 and in accordance with ASTM E1425 and ASTM E90, the STC and OITC Rating shall not be less than:
a. Glass to Exterior - 38 (STC) and 31 (OITC)

1.5 Submittals:

A. Product Data: Include construction details, material descriptions, dimensions of individual components and profiles, hardware, finishes, and installation instructions for each type of aluminum frame storefront system and storefront entrance doors indicated.

B. Shop Drawings: Include plans, elevations, sections, details, hardware, and attachments to work, operational clearances and installation details.

C. Samples for Initial Selection: For units with factory-applied color finishes including samples of hardware and accessories involving color section.

1.6 Quality Assurance

A. Installer Qualifications: An installer which has had successful experience with installation of the same or similar units required for the project and other projects of similar size and scope

B. Manufacturer Qualifications: A manufacturer capable of providing aluminum framed storefront system that meet or exceed performance requirements indicated and of documenting this performance by inclusion of rest reports, and calculations.

C. Source Limitations: Obtain aluminum framed storefront system and storefront entrance doors through one source from a single manufacturer.

D. Product Options: Drawings indicate size, profiles, and dimensional requirements of aluminum framed storefront system and are based on the specific system indicated. Do not modify size and dimensional requirements.
1. Do not modify intended aesthetic effects, as judged solely by Architect, except with Architect's approval. If modifications are proposed, submit comprehensive explanatory data to Architect for review.

1.7 Project Conditions:

A. Field Measurements: Verify actual dimensions of a aluminum framed storefront openings by field measurements before fabrication and indicate field measurements on Shop Drawings.

1.8 Warranty

A. Manufactures Warranty: Submit, for Owner's acceptance, manufacturer's standard warranty.
1. Warranty Period: Two (2) years from Date of Substantial Completion of the project provided however that the Limited Warranty shall begin in no event later than six months from date of shipment by manufacturer.

2.1 Manufacturers:
A. Manufacturer: Kawneer Company Inc., Contact: Doug Hess, Phone: 317-771-9265; email:doug.hess@arconic.com
1. Basis-of-Design Product Storefront Framing:
a. Trifab Versaglaze 451T (thermal) Storefront System
i. 2" x 4-1/2" System Dimensions
ii. Glass: Exterior (Front-Set)

2

2. Basis-of-Design Product Storefront Entrances:
a. The door stile and rail face dimensions of the 500-Wide Stile entrance door will be as follows or as indicated on Drawings: Door: 500; Vertical Stile: 5"; Top Rail: 5"; Bottom Rail: 10"
b. Major portions of the door members to be 0.125" nominal in thickness and glazing molding to be 0.05" thick.
c. Glazing gaskets shall be either EPDM elastometric extrusions or a thermoplastic elastomer.
d. Provide adjustable glass jacks to help center the glass in the door opening.

B. Alternate Storefront Systems only when approved by Arch PM and Chipotle DM.
1. YKK, YES 45 TU Storefront System - 2" x 4-1/2" nominal dimension; Thermal; Front-Set
2. Oldcastle, Series 3000 Thermal MultiPlane Storefront System - 2" x 4-1/2" nominal dimension; Thermal; Front-Set
3. US Aluminum, Series FT451 - 2" x 4-1/2" nominal dimension; Thermal; Front-Set
4. EFCO, Series 403 (T) Storefront System - 2" x 4-1/2" nominal dimension; Thermal
5. Wausau, TU24000 Storefront System - 2" x 4-1/2" nominal dimension; Thermal

2.2 Materials:

A. Provide aluminum entrances and storefront matching the existing building aluminum entrances and storefronts, unless otherwise indicated.

B. Aluminum Frame Extrusions: Alloy and temper recommended by aluminum storefront manufacturer for strength, corrosion resistance, and application of required finish and not less than 0.070" wall thickness at any location for the main frame and complying with ASTM B 221: 6063-T6 alloy and temper.

C. Aluminum Storefront Entrance Extrusions:Alloy and temper recommended by aluminum-framed glass door manufacturer for strength, corrosion resistance, and application of required finish and not less than 0.090" wall thickness at any location for the main frame and sash members.

D. Fasteners: Aluminum, nonmagnetic stainless steel or other materials to be non-corrosive and compatible with aluminum window and door members, trim hardware, anchors, and other components.

E. Anchors, Clips, and Accessories: Aluminum, nonmagnetic stainless steel, or zinc-coated steel or iron complying with ASTM B 633 for SC 3 severe service conditions, or other suitable zinc coating; provide sufficient strength to withstand design pressure indicated.

F. Reinforcing Members: Aluminum, nonmagnetic stainless steel, or nickel/chrome-plated steel complying with ASTM B 456 for Type SC 3 severe service conditions, or zinc-coated steel or iron complying with ASTM B 633 for SC 3 severe service conditions or other suitable zinc coating; provide sufficient strength to withstand design pressure indicated.

G. Sealant: For sealants required within fabricated storefront system, provide permanently elastic, non-shrinking, and non-migrating type recommended by sealant manufacturer for joint size and movement.

H. Tolerances: Reference to tolerances for wall thickness and other cross-section dimensions of storefront members are nominal and in compliance with AA Aluminum Standard Data.

2.3 Storefront Framing System:

A. Thermal Barrier: Thermal Break shall be designed in accordance with AAMA TIR-A8 and tested in accordance with AAMA 505.
1. Kawneer IsoLock Thermal Break with a 1/4" separation consisting of a two-part chemically curing, high-density polyurethane, which is mechanically and adhesively joined to aluminum storefront sections.

B. Brackets and Reinforcements: Manufacturer's standard high-strength aluminum with non-staining, nonferrous shims for aligning system components.

C. Fasteners and Accessories: Manufacturer's standard corrosion-resistant, non-staining, non-bearing fasteners and accessories compatible with adjacent materials. Where exposed shall be stainless steel.

D. Perimeter Anchors: When steel anchors are used, provide insulation between steel material and aluminum material to prevent galvanic action.

E. Packing, Shipping, Handling and Unloading: Deliver materials in manufacturer's original, unopened, undamaged containers with identification labels intact.

F. Storage and Protection: Store materials protected from exposure to harmful weather conditions. Handle storefront material and components to avoid damage. Protect storefront material against damage from elements, construction activities, and other hazards before, during and after storefront installation.

2.4 Glazing Systems:

A. Glazing: As specified in Section 08800 - Glazing.

B. Glazing Gaskets: Manufacturer's standard compression types; replaceable, extruded EPDM rubber.

C. Spacers and Setting Blocks: Manufacturer's standard elastomeric type.

D. Bond-Breaker Tape: Manufacturer's standard TFE-fluorocarbon or polyethylene material to which sealants will not develop adhesion.

E. Glazing Sealants: For structural-sealant-glazed systems, as recommended by manufacturer for joint type, and as follows:
1. Structural Sealant: ASTM C 1184, single-component neutral-curing silicone formulation that is compatible with system components with which it comes in contact, specifically formulated and tested for use as structural sealant and approved by a structural-sealant manufacturer for use in aluminum-framed systems indicated.
a. Color: Black
2. Weatherseal Sealant: ASTM C 920 for Type S, Grade NS, Class 25, Uses NT, G, A, and O; single-component neutral-curing formulation that is compatible with structural sealant and other system components with which it comes in contact; recommended by structural-sealant, weatherseal-sealant, and aluminum-framed-system manufacturers for this use.
a. Color: Matching structural sealant.

2.5 Entrance Door Systems:

A. Entrance Door Hardware: As specified in Section 08710 Door Hardware.

2.6 Accessory Materials:

A. Joint Sealants: For installation at perimeter of aluminum-framed systems, as specified in section 07900 - Joint Sealers

2.7 Storefront Framing Fabrication:

A. Framing Members, General: Fabricate components that, when assembled, have the following characteristics:
1. Profiles that are sharp, straight, and free of defects or deformations.
2. Accurately fit joints; make joints flush, hairline and weatherproof.
3. Means to drain water passing joints, condensation within framing members, and moisture migrating within the system to exterior.
4. Physical and thermal isolation of glazing from framing members.
5. Accommodations for thermal and mechanical movements of glazing and framing to maintain required glazing edge clearances.
6. Provisions for field replacement of glazing.
7. Fasteners, anchors, and connection devices that are concealed from view to greatest extent possible.

B. Mechanically Glazed Framing Members: Fabricate for flush glazing without projecting stops.

C. Structural-Sealant-Glazed Framing Members: Include accommodations for using temporary support device to retain glazing in place while structural sealant cures.

D. Storefront Framing: Fabricate components for assembly using manufacturers standard installation instructions.

E. After fabrication, clearly mark components to identify their locations in Project according to Shop Drawings.

2.8 Storefront Entrance Door Fabrication:

A. Fabricate aluminum-framed glass entrance doors in sizes indicated. Include a complete system for assembling components and anchoring doors.

B. Fabricate aluminum-framed glass doors that are reglazable without dismantling perimeter framing.
1. Door corner construction shall consist of mechanical clip fastening, SIGMA deep penetration plug welds and 1-1/8" long fillet welds inside and outside of all four corners. Glazing stops shall be hook-in type with EPDM glazing gaskets reinforced with non-stretchable cord.
2. Accurately fit and secure joints and corners. Make joints hairline in appearance.
3. Prepare components with internal reinforcement for door hardware.
4. Arrange fasteners and attachments to conceal from view.

C. Weather Stripping: Provide weather stripping locked into extruded grooves in door panels or frames as indicated on manufactures drawings and details.

2.9 Aluminum Finishes:

A. Finish designations prefixed by AA comply with the system established by the Aluminum Association for designating aluminum finishes.

B. Factory Finishing:
1. Kawneer Permafluor (70% PVDF), AAMA 2605, Fluoropolymer Coating (Color: Black or as noted on Drawings)
2. Finishing for alternate storefront specifications to be verified by Arch PM and Chipotle DM

2.10 Brake Metal Trim, min 18ga:

A. Shop Drawings: Show layout and elevations, dimensions and thickness of panels, connections, details and location of joints, sealants and gaskets, method of anchorage, number of anchors, supports, reinforcement, trim, flashings, and accessories.
1. Show actual field measurements on shop drawings.
2. Differentiate between shop and field fabrication.
3. Indicate substrates and adjacent work with which the fabrications must be coordinated.
4. Include large-scale details of anchorages and connecting elements.
5. Include large-scale or schematic exploded or isometric diagrams to fully explain flashing at a scale of not less than 1-1/2 inches per 12 inches (1:10)

B. Refer to Section 05580 for further details

3.1 Examination:

A. Examine openings, substrates, structural support, anchorage, and conditions, with Installer present, for compliance with requirements for installation tolerances and other conditions affecting performance of work. Verify rough opening dimensions, levelness of sill plate and operational clearances. Examine wall flashings, vapor retarders, water and weather barriers, and other built-in components to ensure a coordinated, weather tight framed aluminum storefront system installation.
1. Masonry Surfaces: Visibly dry and free of excess mortar, sand, and other construction debris.
2. Wood Frame Walls: Dry, clean, sound, well nailed, free of voids, and without offsets at joints. Ensure that nail heads are driven flush with surfaces in opening and within 3 inches of opening.
3. Metal Surfaces: Dry; clean; free of grease, oil, dirt, rust, corrosion, and welding slag; without sharp edges or offsets at joints.
4. Proceed with installation only after unsatisfactory conditions have been corrected.

3.2 Installation:

A. Comply with Drawings, Shop Drawings, and manufacturer's written instructions for installing aluminum framed storefront system, aluminum swing storefront entrance doors, accessories, and other components.

B. Install aluminum framed storefront system and storefront doors level, plumb, square, true to line, without distortion or impeding thermal movement, anchored securely in place to structural support, and in proper relation to wall flashing and other adjacent construction.

C. Set sill members and door threshold in bed of sealant or with gaskets, as indicated, for weather tight construction.

D. Install aluminum framed storefront system and components to drain condensation, water penetrating joints, and moisture migrating within sliding door to the exterior. Refer to section 07900 - Joint Sealers.

E. Separate aluminum and other corrodible surfaces from sources of corrosion or electrolytic action at points of contact with other materials.

F. Install aluminum storefront framing system glass and glazing, in accordance with section 08800 and the manufacturer's requirements.

3.3 Adjusting, Cleaning, and Protection:

A. Clean aluminum surfaces immediately after installing aluminum framed storefronts. Avoid damaging protective coatings and finishes. Remove excess sealants, glazing materials, dirt, and other substances.

B. Clean glass immediately after installation. Comply with glass manufacturer's written recommendations for final cleaning and maintenance. Remove nonpermanent labels, and clean surfaces.

C. Remove and replace glass that has been broken, chipped, cracked, abraded, or damaged during construction period.

SECTION 085619 - PASS-THRU WINDOW
1.1 General: Provide door hardware as shown and specified.
A. Standards: Materials and installation shall conform to the following:
1. ASTM A240 - Heat-Resisting Chromium and Chromium-Nickel Stainless Steel Plate, Sheet, and Strip for Pressure Vessels.
2. ASTM A653 - Steel Sheet, Zinc-Coated (Galvanized) or Zinc-Iron Alloy-Coate (Galvannealed) by the Hot-Dip Process.
3. ASTM B209 - Aluminum and Aluminum-Alloy Sheet and Plate.
4. ASTM B221 - Aluminum and Aluminum-Alloy Extruded Bars, Rods, Wire, Profiles, and Tubes.
5. ASTM B580 - Standard Specification for Anodic Oxide Coatings on Aluminum.
6. ASTM B680 - Standard Test Method for Seal Quality of Anodic Coatings on Aluminum by Acid Dissolution.
7. ASTM C1048 - Heat-Treated Flat Glass--Kind HS, Kind FT Coated and Uncoated Glass.
8. ASTM C1172 - Standard Specification for Laminated Architectural Flat Glass.
9. ASTM E774 - Standard Specification for Sealed Insulating Glass Units.
10. Aluminum Association AA DAF-45 - Designation System for Aluminum Finishes.
B. Quality Assurance:
1. Manufacturer Qualifications: Minimum of 25 years successful experience continuously manufacturing pass-thru windows.
2. Installer Qualifications: Installer shall have five years experience manufacturing and fabricating windows of similar type and scope as those specified in this section.
3. Mock-Up: Provide a mock-up for evaluation of surface preparation techniques and application workmanship.
a. Finish areas designated by Architect.
b. Do not proceed with remaining work until workmanship, color, and sheen are approved by Architect.
c. Refinish mock-up area as required to produce acceptable work.
2.1 Materials:
A. Acceptable Manufacturer: Quikserv; Toll Free: 1.800.388.8307; Email: sales@quikserv.com; Web: https://www.quikserv.com/;
B. No substitutions allowed. Requirements for manufacturer, design, grade, function, finish, size and other distinctive qualities of each type of door hardware are indicated on the drawings.
2.2 In-Line Side Sliding Window - Automatic
A. Impact Resistant: In Line Miami Dade Horizontal Bi-Parting Impact Slider, Model: BP-7241E-IP-CHIPOTLE, Complete Unit Size: 72"W x 41"H plus ambient air curtain, to be supplied separate from window unit.
1. Service Opening: 27"W x 27"H
2. Rough Opening: 72-1/2"W x 41-1/2"H
3. Glass: Impact Resistant Glass
4. Miami-Dade NOA #18-0814.02
5. Thru-beam photoelectric bar
6. Dark bronze anodized finish
2.3 Electrical Requirements
A. Impact Resistant Option: Air Curtain separate from window unit, 120V / 60Hz, 20 amp branch cricuit, single-phase required for both
3.1 Installation
A. Install in accordance with manufacturer's instructions.
B. Install pass-thru windows plumb, level, square, true to line, and without warp or rack. Maintain dimensional tolerances and alignment with adjacent Work.
C. Install thermal isolation where components penetrate or disrupt building insulation. Pack fibrous insulation in shim spaces at perimeter of assembly to maintain continuity of thermal barrier.
D. Install pass-thru window components weathertight.
E. Anchor pass-thru windows securely in place to supports. Use attachment methods permitting adjustment for construction tolerances, irregularities, alignment, and expansion and contraction.
F. Separate aluminum from other metal surfaces with bituminous coatings or other means approved by Architect.
G. Coordinate installation of related sheet metal flashing as specified in Section 07 62 00 - Sheet Metal Flashing and Trim.
H. Install perimeter joint sealants as specified in Section 07 91 23 - Backer Rods.

SECTION 08710 - DOOR HARDWARE

1.1 General: Provide door hardware as shown and specified.

A. Standards: Materials and installation shall conform to the following:
1. ANSI A117.1-2009 Accessible and Usable Buildings and Facilities.
2. ANSI/BHMA A156 Series Builders Hardware

B. Quality Assurance:
1. Codes and standards: Provide hardware complying with local Building Code requirements and the Tenant's standards for keying and security systems.
2. Project scheduling: Performed by an Architectural Hardware Consultant (AHC).
3. Package each item of hardware and each lockset, complete with all screws, anchors, installation instructions and templates. Identify package indexing with corresponding item number of the hardware schedule.
4. After hardware schedule acceptance, provide necessary templates or physical hardware to required trades for cutting, reinforcing, or preparing their products to receive hardware. Furnish templates to metal door manufacturer's.

2.1 Materials:

A. No substitutions allowed. Requirements for manufacturer, design, grade, function, finish, size and other distinctive qualities of each type of door hardware are indicated on the drawings.

B. Review the keying system with the Tenant and provide the type required.

3.1 Installation

A. Install each hardware item in strict accordance with manufacturer's installation instructions and recommendations. Securely fasten all attached parts. Fit faces of mortised parts snug and flush. Verify operating parts move freely and smoothly without binding or sticking, without excessive clearance.

B. Set units level, plumb and true to line and location. Adjust and reinforce attachment substrate as required for proper installation and operation. Drill and countersink units that are not factory prepared for anchorage fasteners. Space fasteners and anchors in accordance with industry standards.

C. Mount hardware units at heights indicated in DHI "Recommended Locations for Builders Hardware", unless otherwise required to comply with requirements of governing codes and regulations. Conform to ANSI A117.1 and ADAGG guidelines for accessibility.
1. Top Butts: 5 inches; top of butt from head of frame.
2. Middle Butts: 3'-2", centerline from finish floor.
3. Bottom Butts: 5 inches; finish floor to bottom of butt.
4. Locks: centerline from finish floor per hardware schedule.
5. Knobs: 3'-2", centerline from finish floor.
6. Pulls: centerline from finish floor per hardware schedule.
7. Pushes: centerline from finish floor per hardware schedule.

2

SECTION 10700 - EXTRUDED ALUMINUM CANOPY

1.1 General: Provide canopies as shown and specified.
A. Standards: Materials and installation shall conform to the following:
1. AWS, D1.1 - Structural Welding Code - Steel
2. AMMA, Aluminum Finishes AAMA 2604 (FGIA 2604) - Powder Coat
B. Quality Assurance
1. Shop Drawings: To be created under the guidance of a professional engineer. Site Specific stamped drawing may be required by the manufacturer based on location. Drawings must indicate size, material and finish. Include plan, elevations and sections to clearly outline the canopy locations. Include installation procedures, details of joints, attachments and clearances.
a. Submit within 15 days after contract award.

2.1 Manufacturers:
A. Architectural Fabrication, Inc. – Manufacturer is located at 2100 E. Richmond Avenue, Fort Worth, TX 76104. P: (800) 962-8027. E: chipotle@arch-fab.com, W: www.arch-fab.com
B. Substitutions are acceptable assuming they comply with this specification, are submitted based on Quality Assurance and Division1 - Section 01100 requirements and have minimum 10 years experience, and only when approved by Arch PM and Chipotle DM.
1. Awnex, Contact: Katie Dicks, P: 770-704-7140 x151, E: katie@awnexinc.com
2. Uni-Structures, Contact: Dana Fredericks, P: 678-974-1773
3. API, Contact: Jade Moore-Esposito, P: 813-925-0144, E: jesposito@americanproducts.com

2.2 Materials:
A. Specifications are based on Architectural Fabrication, Inc. - Helios Canopy Patent #9,976,310
1. Framing: Gutter fascia, tube, angles: 6063-T6 alloy extruded aluminum. Gutter to be notched in the back to allow steel support arms to pass through.
2. Decking: Extruded aluminum 8" wide deck pan in 6063-T6 or 6063-T5 alloy (Roll form is not acceptable)
3. Steel Support Arms: 3" x 3" x .250" Steel tube support arms w/ 8" w x 5"h x 1/2" thick steel plate welded to the back. Must manufacture steel arm in manner to leave room for LED enclosure at back of canopy.
4. Hardware and Fasteners: Nuts, bolts, washers, clevis pins, screws, anchors and pipe spacers to be zinc plated or galvanized steel required to suit application and per pre-engineered canopy load requirements. Typical wall anchors are minimum ½" diameter. Touch up paint must be provided for each canopy to allow for potential repairs in the field.
5. Flashing: Shall be minimum 0.040-inch aluminum, fabricated to prevent leakage and sealed with Novaflex metal roof sealant in custom color match. Another equivalent sealant is acceptable.
6. LED Enclosure: Each canopy is to have a preformed aluminum LED enclosure along the back edge of the canopy finished in the same powder coat as the canopy. 1" nominal inside width, and a minimum aluminum sheet thickness of .063".
7. Scuppers: Drainage for canopy is (2) aluminum scuppers located at the front of the canopy per drawings. See finish below for details.
8. Finish: All aluminum shall be powder coat finish per FGIA 2604 (aka AAMA 2604). Steel shall be commercially blasted, then coated with a zinc rich primer, color per Elevations, and finally the top coat of super polyester powder (2604 compliant) applied.

3.1 Installation:
1. Install canopies per manufacturers written instructions and videos, and as indicated on architectural drawings.
2. Locate and place canopies level, plumb and at indicated alignment with adjacent work.
3. Use concealed anchors where possible.
4. Repair damaged finishes so no evidence of corrective work. Return items to the factory that cannot be refinished in the field. Make required alterations and refinish entire unit or provide new units.
5. Protect galvanized and non-ferrous-metal surfaces from corrosion or galvanic action by applying coating of bituminous paint or Elastomeric coating on surfaces that will be in contact with concrete, masonry or dissimilar metals.

12/3/2025 2:54 PM

FWH Architects
3336 Grand Blvd. Suite 201
Holiday, Florida 34690
Ph. 727. 815. 3336
FABER@FWHARCHITECTS.COM

brightwork real estate
3708 WEST SWANN AVE.
SUITE 200
TAMPA, FL 33609
PHONE: 813.874.1700

TO THE BEST OF THE KNOWLEDGE OF THE ARCHITECT'S AND ENGINEERS, SAID PLANS AND SPECIFICATIONS COMPLY WITH THE APPLICABLE MINIMUM BUILDING CODES AND THE APPLICABLE MINIMUM FIRE SAFETY STANDARDS

GUY F. FABER
FL License No. AR0015323
seal

no.	date	revision descriptions
1	12.02.2025	REVISED PER COORDINATION W/ TENANT INTERIORS

CHIPOTLE MEXICAN GRILL
BUILDING SHELL

2000 NOLTE ROAD
ST. CLOUD, FLORIDA 34722

08.29.2025
date

25008
comm. no.

ARCHITECTURAL SPECIFICATIONS

G013

SECTION 088000 - GLAZING
PART 1 - GENERAL
1.1 SECTION REQUIREMENTS
A. SUBMITTALS: PRODUCT DATA AND 12-INCH- (300-MM-) SQUARE SAMPLES.
B. COMPLY WITH WRITTEN INSTRUCTIONS OF GLASS PRODUCT MANUFACTURERS; GANA'S "GLAZING MANUAL;" AND PUBLICATIONS OF GANA, AAMA, AND SIGMA AS APPLICABLE TO PRODUCTS INDICATED, UNLESS MORE STRINGENT REQUIREMENTS ARE INDICATED.
C. GLASS AND GLAZING WORK INCLUDES STOREFRONT AND ENTRANCE GLAZING (NOT INDICATED AS PRE-GLAZED, HURRICANE RESISTANT GLASS.
1.2 SYSTEM PERFORMANCE
A. PROVIDE GLASS AND GLAZING THAT WILL WITHSTAND NORMAL TEMPERATURE CHANGES, WIND LOADING, IMPACT LOADING, ETC. WITHOUT BREAKAGE OF GLASS, FAILURE OF SEALS AND LOSS OF AIR-TIGHTNESS AND WATER-TIGHTNESS
1.3 QUALITY ASSURANCE
A. COMPLY WITH RECOMMENDATIONS OF THE FLAT GLASS MARKETING ASSOCIATION "GLAZING MANUAL" AND "SEALANT MANUAL"
B. COMPLY WITH INSULATED GLASS MANUFACTURER'S ASSOCIATION (SIGMA) #65-7-2
C. HURRICANE / IMPACT RESISTANT GLAZING SYSTEM: MUST PASS DADE AND BROWARD COUNTY HURRICANE CYCLING AND IMPACT TESTS AND COMPLY WITH ANSI Z97.1 AND CPSC CATEGORY II
D. WARRANTY: PROVIDE WRITTEN WARRANTY COVERING MANUFACTURER DEFECTS, SIGNED BY THE MANUFACTURER, FOR THE PERIODS STATED BELOW AFTER SUBSTANTIAL COMPLETION
1. INSULATED GLASS: MANUFACTURER'S STANDARD TEN-YEAR MINIMUM PERIOD
2. FLOAT GLASS: MANUFACTURER'S STANDARD FIVE-YEAR MINIMUM PERIOD
3. LAMINATED GLASS: MANUFACTURER'S STANDARD FOUR-YEAR MINIMUM PERIOD
PART 2 - PRODUCTS
2.0 MANUFACTURERS
A. SUBJECT TO COMPLIANCE WITH REQUIREMENTS, PROVIDE PRODUCTS BY ZELEDYNE GLASS PRODUCTS, PPG INDUSTRIES (GLASS GROUP), GUARDIAN INDUSTRIES CORP., VIRACON INC.
B. HURRICANE / IMPACT RESISTANT GLASS: SUBJECT TO COMPLIANCE WITH REQUIREMENTS, PROVIDE PRODUCTS BY ARCH ALUMINUM AND GLASS CO., INC, GLASSLAM, N.G.I., INSULGARD CORP., INTERPANE, SAFLEX, VIRACON, INC.
2.1 GLASS PRODUCTS
A. CLEAR TEMPERED FLOAT GLASS: GRADE B (FULLY TEMPERED), STYLE I UNCOATED SURFACES), TYPE I, QUALITY Q3, CLASS 1
B. FOR HURRICANE RESISTANT PROJECTS
1. BASIS OF DESIGN: 1 5/16" NOMINALLY THICK, INSULATING, LAMINATED, LOW E COATED GLASS AS MANUFACTURED BY VIRACON.
A. EXTERIOR GLASS PLY: 1/4" CLEAR HS OR FT AS REQUIRED BY CODE
B. COATING: VIRACON VE-2M NEUTRAL LOW E ON #2 SURFACE
C. AIRSPACE: 1/2" AIR FILLED, BLACK PAINTED
D. SILICONE: BLACK
E. INTERIOR GLASS PLY 1: 1/4" CLEAR HS
F. INTERLAYER: SELECT KIND AND THICKNESS AS TESTED IN THE COMBINED ASSEMBLY FOR HURRICANERESISTANCE TO MEET THE FLORIDA BUILDING CODE 6TH EDITION
G. INTERIOR GLASS PLY 2: 1/4" CLEAR HS
2. PERFORMANCE REQUIREMENTS
A. VISIBLE LIGHT TRANSMITTANCE 68%
B. EXTERIOR (VIS-OUT) REFLECTANCE 11%
C. INTERIOR (VIS-IN) REFLECTANCE 11%
D. WINTER U-VALUE 0.29
E. SUMMER U-VALUE 0.26
F. SOLAR HEAT GAIN COEFFICIENT 0.37
G. LIGHT TO SOLAR GAIN RATIO 1.84
2
C. VIRASPAN MONOLITHIC SPANDREL GLASS
A. 1/4" VIRASPAN MONOLITHIC SPANDREL GLASS AS MANUFACTURED BY VIRACON.
B. GLASS PLY: 1/4" CLEAR HEAT TREATED (TEMPER WHERE REQUIRED BY CODE)
C. CERAMIC FRIT: V948 MEDIUM GRAY VIRASPAN CERAMIC PAINT ON #2 SURFACE
D. PERFORMANCE REQUIREMENTS
WINTER U-VALUE 1.05
SUMMER U-VALUE 1.02
2.2 GLAZING GASKETS / TAPE
A. GLAZING GASKETS: ASTM C864, RESILIENT POLYVINYL CHLORIDE, EXTRUDED SHAPE TO FIT GLAZING CHANNEL RETAINING SLOT; BLACK COLOR.
B. GLAZING TAPE: CLOSED CELL POLYVINYL CHLORIDE FOAM, MAXIMUM WATER ABSORPTION BY VOLUME 2 PERCENT, DESIGNED FOR 25 PERCENT COMPRESSION FOR AIR BARRIER VAPOR RETARDER SEAL, BLACKCOLOR, COILED ON RELEASE PAPER OVER ADHESIVE ON TWO SIDES; WIDTHS REQUIRED FOR SPECIFIC INSTALLATION
C. GLAZING TAPE: BUTYL COMPOUND TAPE WITH INTEGRAL RESILIENT TUBE SPACER, 10 TO 15 SHORE A DUROMETER HARDNESS, BLACK COLOR, COILED ON RELEASE PAPER, WIDTHS REQUIRED FOR SPECIFIC INSTALLATION.
2.3 MISCELLANEOUS GLAZING MATERIALS
A. COMPATIBILITY: ALL MATERIALS SHALL BE COMPATIBLE WITH SURFACES CONTACTED IN INSTALLATION
B. CLEANERS, PRIMERS AND SEALERS: AS RECOMMENDED BY SEALANT/GASKET MANUFACTURER.
C. SETTING BLOCKS: ASTM C 864 NEOPRENE, 80 TO 90 SHORE A DUROMETER HARDNESS; LENGTH 4 INCHES, WIDTH OF GLAZING RABBET SPACE LESS 1/16 INCH, HEIGHT REQUIRED FOR GLAZING METHOD, PANE WEIGHT AND PANE AREA.
D. SPACERS: SHIMS: ASTM C 864: NEOPRENE, 50 TO 60 SHORE A DUROMETER HARDNESS; LENGTH 3 INCHES, ONE HALF HEIGHT OF GLAZING STOP, THICKNESS REQUIRED FOR APPLICATION, ONE FACE SELF-ADHESIVE.
E. GLAZING SPLINES: ASTM C 864, RESILIENT POLYVINYL CHLORIDE, EXTRUDED SHAPE TO FIT GLAZING CHANNEL RETAINING SLOT; BLACK COLOR
PART 3 - EXECUTION
3.1 PREPARATION / INSTALLATION
A. CLEAN GLAZING / FRAMING MEMBERS IMMEDIATELY BEFORE GLAZING TO REMOVE ALL DETRIMENTAL SUBSTANCES
B. ADJUST GLAZING CHANNEL DIMENSIONS AS REQUIRED BY CONDITIONS FOR PROPER BITE, EDGE/FACE CLEARANCES, AND SEAL THICKNESS
C. INSTALL PROPERLY SIZED SETTING BLOCKS IN SILL RABBET AT ONE QUARTER OF GLASS WIDTH FROM EACH CORNER, BUT NOT CLOSER THAN 6 INCHES UNLESS NOTED. SET BLOCKS IN THIN COURSE OF SEALANT SUITABLE FOR HEEL BEAD USE.
D. PROVIDE SPACERS AND EDGE BLOCKS, CORRECTLY SIZED FOR CONDITIONS. PROVIDE 1/8 INCH MINIMUM BITE OF SPACERS ON GLASS.
E. MITER WEDGE-SHAPED GASKETS AT CORNERS, PREVENT PULL AWAY AT CORNERS, SEAL CORNER AND BUTT JOINTS AS RECOMMENDED BY GASKET MANUFACTURER.
F. TRIM SIGHT EXPOSED TAPE FLUSH WITH STOP AND FINISH SEALANT FLUSH WITH SIGHT LINE
3.2 PROTECTION AND CLEANING
A. PROTECT GLASS FROM CONTAMINATING SUBSTANCES
B. REMOVE AND REPLACE BROKEN, CHIPPED, CRACKED, ABRADED OR DAMAGED GLASS
C. REMOVE LABELS AND WASH GLASS ON BOTH FACES PRIOR TO FINAL ACCEPTANCE
D. REMOVE GLAZING MATERIALS FROM FINISHED SURFACES
DIVISION 9 -- FINISHES

SECTION 09240 - COMMERCIAL CEMENT PLASTER 1
PART I - GENERAL
1.01 SUMMARY:
THIS DOCUMENT IS INTENDED TO BE USED IN PREPARING SPECIFICATIONS FOR PROJECTS UTILIZING COMMERCIAL CEMENT PLASTER 1 BY DRYVIT APPLIED TO CONCRETE OR CMU SUBSTRATES.
1.02 REFERENCES
A. INTERNATIONAL BUILDING CODES (IBC AND IRC)
B. AMERICAN CONCRETE INSTITUTE ACI 524R: GUIDE TO PORTLAND CEMENT PLASTERING
C. PORTLAND CEMENT ASSOCIATION: PORTLAND CEMENT PLASTER (STUCCO) MANUAL
D. ASTM A 526: STEEL SHEET, HOT-DIP GALVANIZED, COMMERCIAL QUALITY
E. ASTM C 150: STANDARD SPECIFICATION FOR PORTLAND CEMENT
F. ASTM C 754: STANDARD SPECIFICATION FOR INSTALLATION OF STEEL FRAMING MEMBERS TO RECEIVE SCREW-ATTACHED GYPSUM PANEL PRODUCTS
G. ASTM C 847: STANDARD SPECIFICATION FOR METAL LATH
H. ASTM C 897: STANDARD SPECIFICATION FOR AGGREGATE FOR JOB MIXED PORTLAND CEMENT BASED PLASTERS
I. ASTM C 920: STANDARD SPECIFICATION FOR ELASTOMERIC JOINT SEALANTS
J. ASTM C 926: STANDARD SPECIFICATION FOR APPLICATION OF PORTLAND CEMENT-BASED PLASTER
K. ASTM C 1007: STANDARD SPECIFICATION FOR INSTALLATION OF LOAD BEARING (TRANSVERSE AND AXIAL) STEEL STUDS AND RELATED ACCESSORIES.
L. ASTM C 1063: STANDARD SPECIFICATION FOR INSTALLATION OF LATHING AND FURRING TO RECEIVE INTERIOR AND EXTERIOR PORTLAND CEMENT-BASED PLASTER
M. ASTM C 1328: STANDARD SPECIFICATION FOR PLASTIC (STUCCO) CEMENT
N. ASTM D 226: STANDARD SPECIFICATION FOR ASPHALT SATURATED ORGANIC FELT USED IN ROOFING AND WATERPROOFING
O. ASTM D 1784: STANDARD SPECIFICATION FOR RIGID POLY (VINYL CHLORIDE) (PVC) COMPOUNDS AND CHLORINATED POLY (VINYL CHLORIDE) (CPVC) COMPOUNDS
P. ICC-ES AC11: CEMENTITIOUS EXTERIOR WALL COATINGS
1.03 SUBMITTALS
A. SUBMITTAL REQUIREMENTS BY THE CONTRACTOR ARE TO BE INDICATED IN THE CONSTRUCTION DOCUMENTS AS REQUIRED, INCLUDING:
1. PRODUCT LITERATURE, SAMPLES OR MOCK UP.
2. FINISH SAMPLE INDICATING COLOR AND TEXTURE FOR APPROVAL BY ARCHITECT/OWNER.
1.04 DESCRIPTION
A. COMMERCIAL CEMENT PLASTER 1 CONSISTS OF DRYVIT CCP BASE - SANDED OR CONCENTRATE*, DRYVIT ACRYLIC PRIMER AND DRYVIT ACRYLIC COATING OR FINISH. CCP BASE MAY BE APPLIED DIRECTLY TO THE PROPERLY PREPARED CONCRETE OR CMU SUBSTRATE OR TO METAL LATH AND WATER-RESISTIVE BARRIER (AS SPECIFIED).
1. DESIGN REQUIREMENTS:
A. SUBSTRATES SHALL COMPLY WITH LOCAL CODE REQUIREMENTS AND PRACTICES FOR USE UNDER CEMENT PLASTER AND SHALL BE:
1) POURED IN PLACE OR PRECAST CONCRETE
2) CMU MASONRY
B. THE ROOFING MATERIALS SHALL BE LOADED ONTO THE ROOF AND INTERIOR WALLBOARD STOCKED IN THE BUILDING PRIOR TO THE INSTALLATION OF THE COMMERCIAL CEMENT PLASTER 1.
C. DEFLECTION OF SUBSTRATE SYSTEMS SHALL NOT EXCEED L/360.
D. THE SLOPE OF INCLINED SURFACES SHALL NOT BE LESS THAN 6:12 (27°) AND THE LENGTH SHALL NOT EXCEED 12".
E. SLOPES ON WINDOWSILLS PROJECTING 4 IN (102 MM) OR LESS, SHALL NOT BE LESS THAN 3:12.
F. EXPANSION JOINTS:
1) DESIGN AND LOCATION OF EXPANSION JOINTS SHALL BE DETERMINED BY THE PROJECT DESIGN PROFESSIONAL AND INDICATED ON THE CONTRACT DOCUMENTS. AS A MINIMUM, EXPANSION JOINTS IN THE COMMERCIAL CEMENT PLASTER 1 ARE REQUIRED AT THE FOLLOWING LOCATIONS:
A) WHERE EXPANSION JOINTS OCCUR IN THE SUBSTRATE SYSTEM.
B) WHERE BUILDING EXPANSION JOINTS OCCUR.
C) AT FLOOR LINES IN WOOD FRAME CONSTRUCTION.
D) WHERE COMMERCIAL CEMENT PLASTER 1 ABUTS DISSIMILAR MATERIALS.
E) WHERE THE SUBSTRATE CHANGES.
F) WHERE SIGNIFICANT STRUCTURAL MOVEMENT OCCURS SUCH AS CHANGES IN ROOFLINE, BUILDING SHAPE OR STRUCTURAL SYSTEM.
G. CONTROL JOINTS:
1) DESIGN AND LOCATION OF CONTROL JOINTS SHALL BE DETERMINED BY THE DESIGN PROFESSIONAL IN GENERAL ACCORDANCE WITH ASTM C 1063 AND INDICATED ON THE CONTRACT DRAWINGS. AS A MINIMUM, CONTROL JOINTS SHALL BE LOCATED AT THE FOLLOWING LOCATIONS:
A) CORNERS OF OPENINGS
B) SUCH THAT MONOLITHIC WALL AREAS DO NOT EXCEED 144 SQ FT
C) LENGTH TO WIDTH RATIOS OF WALL AREAS SHALL NOT EXCEED 2.5:1
D) MAXIMUM SPACING OF CONTROL JOINTS SHALL NOT EXCEED 18 FT (5.5 M)
H. SEALANTS
1) REFER TO DRYVIT PUBLICATION DS153 FOR A LIST OF SEALANTS THAT HAVE BEEN TESTED FOR COMPATIBILITY WITH DRYVIT PRODUCTS.
I. VAPOR RETARDERS
1) USE AND LOCATION OF VAPOR RETARDERS WITHIN A WALL ASSEMBLY IS THE RESPONSIBILITY OF THE PROJECT DESIGNER AND SHALL COMPLY WITH LOCAL BUILDING ODE REQUIREMENTS. TYPE AND LOCATION SHALL BE NOTED ON THE CONTRACT DOCUMENTS. VAPOR RETARDERS MAY BE INAPPROPRIATE IN CERTAIN AREAS AND CAN RESULT IN CONDENSATION WITHIN THE WALL ASSEMBLY WHEN INCORRECTLY USED. REFER TO DRYVIT PUBLICATION DS159 FOR ADDITIONAL INFORMATION.
J. FLASHING SHALL BE PROVIDED AT ALL ROOF-WALL INTERSECTIONS, WINDOWS, DOORS, CHIMNEYS, DECKS, BALCONIES, AND OTHER AREAS AS NECESSARY TO PREVENT WATER PENETRATION BEHIND COMMERCIAL CEMENT PLASTER 1.
K. SITE COATED EPS SHAPES AND STARTER BOARDS: SHALL BE COATED ON SITE UTILIZING THE SAME MATERIALS (EPS, BASE MATERIAL MIXTURE, REINFORCING MESH, AND FINISH) AS SPECIFIED FOR THE PROJECT.
L. PRE BASE COATED EPS SHAPES AND STARTER BOARDS: SHALL BE SUPPLIED BY ACROCORE OR OTHER APPROVED SHAPE MANUFACTURER.
2. PERFORMANCE REQUIREMENTS: AS A MINIMUM, DRYVIT COMMERCIAL CEMENT PLASTER 1 PRODUCTS SHALL MEET:
A. ASTM C 1328: STANDARD SPECIFICATION FOR PLASTIC (STUCCO) CEMENT
1.05 QUALITY ASSURANCE
A. QUALIFICATIONS:
1. MANUFACTURER: SHALL BE DRYVIT SYSTEMS, INC. OR APPROVED SUPPLIERS. ALL MATERIALS SHALL BE OBTAINED FROM DRYVIT SYSTEMS, INC. OR ITS AUTHORIZED DISTRIBUTORS.
2. PLASTERING CONTRACTOR:
A. SHALL BE KNOWLEDGEABLE IN THE PROPER INSTALLATION OF EXTERIOR LATHING AND CEMENT PLASTER PRODUCTS.
B. SHALL HAVE QUALIFIED AND PROPERLY TRAINED PEOPLE TO PERFORM WORK.
C. SHALL BE LICENSED, BONDED AND INSURED.
D. SHALL HAVE EXPERIENCE IN APPLICATION OF CEMENT PLASTER PRODUCTS ON PROJECTS OF COMPARABLE SCOPE.
3. MACHINE COATED DRYVIT EPS SHAPES AND STARTER BOARDS: SHALL BE SUPPLIED BY ACROCORE OR OTHER MANUFACTURER THAT SUBSCRIBES TO THE DRYVIT THIRD PARTY CERTIFICATION AND QUALITY ASSURANCE PROGRAM.
B. MOCK-UP
1. THE CONTRACTOR SHALL, BEFORE THE PROJECT COMMENCES, PROVIDE THE OWNER/ARCHITECT WITH A MOCK-UP FOR APPROVAL.
2. THE MOCK-UP SHALL BE OF SUITABLE SIZE AS REQUIRED TO ACCURATELY REPRESENT EACH COLOR AND TEXTURE TO BE UTILIZED ON THE PROJECT.
3. THE MOCK-UP SHALL BE PREPARED WITH THE SAME PRODUCTS, TOOLS, EQUIPMENT AND TECHNIQUES REQUIRED FOR THE ACTUAL APPLICATIONS. THE FINISH USED SHALL BE FROM THE SAME BATCH AS THAT BEING USED FOR THE PROJECT.
4. THE APPROVED MOCK-UP SHALL BE AVAILABLE AND MAINTAINED AT THE JOB SITE.
1.06 DELIVERY, STORAGE AND HANDLING
A. ALL COMMERCIAL CEMENT PLASTER 1 MATERIALS SHALL BE DELIVERED TO THE JOB SITE IN THE ORIGINAL, UNOPENED PACKAGES WITH LABELS INTACT. QUESTIONABLE MATERIALS SHALL NOT BE USED.
B. MATERIALS SHALL BE STORED AT THE JOB SITE, AND AT ALL TIMES, IN A COOL, DRY LOCATION, OUT OF DIRECT SUNLIGHT, PROTECTED FROM WEATHER AND OTHER SOURCES OF DAMAGE. MINIMUM STORAGE TEMPERATURE SHALL BE AS FOLLOWS:
1. DPR, PMR™, HDP™, WEATHERLASTIC AND E FINISHES, COLOR PRIME, PRIMUS, GENESIS AND NCB: 40 °F (4 °C).
C. FOR OTHER PRODUCTS, REFER TO SPECIFIC PRODUCT DATA SHEETS.
D. PROTECT ALL PRODUCTS FROM WEATHER AND DIRECT SUNLIGHT.
E. MAXIMUM STORAGE TEMPERATURE SHALL NOT EXCEED 100 °F (38 °C). NOTE: MINIMIZE EXPOSURE OF MATERIALS TO TEMPERATURES OVER 90 °F (32 °C). FINISHES EXPOSED TO TEMPERATURES OVER 110 °F (43 °C) FOR EVEN SHORT PERIODS MAY EXHIBIT SKINNING, INCREASED VISCOSITY AND SHOULD BE INSPECTED PRIOR TO USE.
1.07 PROJECT CONDITIONS
A. APPLICATION OF WET MATERIALS SHALL NOT TAKE PLACE DURING INCLEMENT WEATHER UNLESS APPROPRIATE PROTECTION IS PROVIDED. PROTECT MATERIALS FROM INCLEMENT WEATHER UNTIL THEY ARE DRY.
B. DRYVIT CCP BASE SHALL NOT BE APPLIED WHEN WALL OR AMBIENT TEMPERATURES ARE BELOW 40 °F (4 °C).
C. AT THE TIME OF DRYVIT PRODUCT APPLICATION, THE AIR AND WALL SURFACE TEMPERATURES SHALL BE FROM 40 °F (4 °C) MINIMUM TO 100 °F (38 °C) MAXIMUM FOR THE FOLLOWING PRODUCTS:
1. DPR, PMR, HDP, WEATHERLASTIC AND E FINISHES™, COLOR PRIME, PRIMUS, GENESIS AND NCB.
2. FOR OTHER PRODUCTS, REFER TO SPECIFIC PRODUCT DATA SHEETS.
D. THESE TEMPERATURES SHALL BE MAINTAINED WITH ADEQUATE AIR VENTILATION AND CIRCULATION FOR A MINIMUM OF 24 HOURS (48 HOURS FOR WEATHERLASTIC FINISHES, AMERISTONE, AND TERRANEO) THEREAFTER, OR UNTIL THE PRODUCTS ARE COMPLETELY DRY. REFER TO PUBLISHED PRODUCT DATA SHEETS FOR MORE SPECIFIC INFORMATION.
E. CCP BASE SHALL BE COMPLETELY DRY AND PROPERLY CURED FOR A MINIMUM OF 7 DAYS PRIOR TO PRIMER APPLICATION.
F. IF NECESSARY, TENTING, HEATING AND VENTILATION MAY BE UTILIZED TO MAINTAIN REQUIRED CONDITIONS. HEATERS SHALL BE VENTED TO THE OUTSIDE.
G. PROTECT THE COMMERCIAL CEMENT PLASTER 1 MATERIALS FROM UNEVEN AND EXCESSIVE EVAPORATION IN DRY, WARM, OR WINDY WEATHER. ALWAYS WORK THE SHADY SIDE OF THE WALL. REFER TO SECTION 3.03.B AND 3.03.C FOR CCP BASE CURING REQUIREMENTS.
1.08 SEQUENCING AND SCHEDULING
A. INSTALLATION OF THE COMMERCIAL CEMENT PLASTER 1 SHALL BE COORDINATED WITH OTHER CONSTRUCTION TRADES.
1.09 WARRANTY
A. DRYVIT SYSTEMS, INC. SHALL PROVIDE A LIMITED WARRANTY AGAINST DEFECTIVE MATERIAL UPON WRITTEN REQUEST. DRYVIT SHALL MAKE NO OTHER WARRANTIES, EXPRESSED OR IMPLIED. DRYVIT DOES NOT WARRANT WORKMANSHIP. FULL DETAILS ARE AVAILABLE FROM DRYVIT SYSTEMS, INC.
PART II - PRODUCTS
2.01 MANUFACTURER:
A. ALL COMPONENTS OF COMMERCIAL CEMENT PLASTER 1 SHALL BE OBTAINED FROM DRYVIT OR ITS AUTHORIZED DISTRIBUTORS.
2.02 MATERIALS
A. PAPER BACKED METAL LATH (BY OTHERS): SPECIFIC TYPE TO BE SELECTED BY DESIGNER BASED ON SPECIFIC PROJECT REQUIREMENTS. PAPER BACKING OR OTHER SLIP SHEET IS REQUIRED WHEN INSTALLED OVER BACKSTOP® NT™ LIQUID AIR/WATER RESISTIVE BARRIER.
1. SELF-FURRING DIAMOND MESH METAL LATH SHALL BE GALVANIZED, MINIMUM 2.5 LBS/SQ YD (1.4 KG/M^2) OR 3.4 LBS/YD^2 (1.9 KG/M^2) AND COMPLY WITH ASTM C 847.
2. SELF FURRING WELDED WIRE LATH, MINIMUM 16 GAUGE, SHALL BE GALVANIZED WITH OPENINGS NOT EXCEEDING 2 IN X 2 IN (51 MM X 51 MM), AND COMPLY WITH ASTM C 933.
3. 3/8 IN (9.5 MM) GALVANIZED RIB LATH SHALL COMPLY WITH ASTM C 847.
4. SELF FURRING WOVEN WIRE LATH, MINIMUM 17 GAUGE, SHALL BE GALVANIZED WITH OPENINGS NOT EXCEEDING 1 1/2 IN X 1 1/2 IN (38 MM X 38 MM) MEETING ASTM C 1032.
B. ACCESSORIES (BY OTHERS).
1. TYPE, STYLE AND MANUFACTURER SHALL BE INDICATED ON CONSTRUCTION DOCUMENTS.
2. DEPTH OF ACCESSORIES (GROUNDS) SHALL BE SIZED FOR THE PLASTER THICKNESS.
3. IN CORROSIVE ENVIRONMENTS, ACCESSORIES MANUFACTURED OF PVC OR ZINC ARE RECOMMENDED.
4. STEEL ACCESSORIES SHALL MEET ASTM C 841.
5. PVC ACCESSORIES SHALL MEET ASTM D 1784 AND ASTM C 1063.
C. PLASTER BASE COAT:
1. DRYVIT CCP BASE - SANDED: A FIBERGLASS REINFORCED, CEMENT PLASTER MIX UTILIZING ALKALI RESISTANT FIBERS AND PROPRIETARY CEMENTITIOUS ADMIXTURES WHICH IS FIELD MIXED WITH W WATER AND DRYVIT AC-100 ACTIVATOR (WHEN SPECIFIED). CCP BASE - SANDED IS PACKAGED IN 80 LB (36.3 KG) BAGS.
D. MACHINE COATED DRYVIT EPS SHAPES AND STARTER BOARDS: SHALL BE SUPPLIED BY ACROCORE OR OTHER MANUFACTURER THAT SUBSCRIBES TO THE DRYVIT THIRD PARTY CERTIFICATION AND QUALITY ASSURANCE PROGRAM.
E. PRIMER:
1. DRYVIT COLOR PRIME™, COLOR PRIME-W OR PRIMER WITH SAND™: A WATER-BASED, PIGMENTED ACRYLIC PRIMER APPLIED OVER THE CURED COMMERCIAL CEMENT PLASTER BASE COAT TO IMPROVE ADHESION AND PROVIDE A MORE UNIFORM APPEARANCE OF THE FINISH.
F. DRYVIT COATING:
1. DEMANDIT SMOOTH - INTEGRALLY COLORED SMOOTH EXTERIOR WALL COATING ENHANCED WITH PROVEN MILDEW RESISTANCE. A MINIMUM OF 2 COATS ARE REQUIRED.
G. DRYVIT FINISH(ES): 100% ACRYLIC FINISHES WITH INTEGRAL COLOR AND TEXTURE. SHALL BE THE TYPE, COLOR AND TEXTURE AS SELECTED BY THE ARCHITECT/OWNER AND SHALL BE OF THE FOLLOWING TYPES:
1. STANDARD DPR (DIRT PICKUP RESISTANCE): WATER-BASED, ACRYLIC COATING WITH INTEGRAL COLOR AND TEXTURE AND FORMULATED WITH DPR CHEMISTRY:
A. SANDPEBBLE FINE DPR: FINE PEBBLE TEXTURE
PART III - EXECUTION
3.01 EXAMINATION
A. PRIOR TO INSTALLATION OF COMMERCIAL CEMENT PLASTER 1, IT IS THE CONTRACTOR'S RESPONSIBILITY TO ENSURE THAT:
1. THE SURFACES TO RECEIVE PLASTER ARE FREE OF DUST, LOOSE PARTICLES, OIL AND OTHER CONDITIONS THAT WOULD AFFECT THE ADHESION, INSTALLATION OR PERFORMANCE OF COMMERCIAL CEMENT PLASTER 1 MATERIALS.
2. THE LATH IS OF THE PROPER TYPE, INSTALLED TIGHT, PROPERLY FASTENED, AND MEETS THE REQUIREMENTS OF ASTM C 1063, ASTM C 847 (EXPANDED METAL), ASTM C 933 (WELDED WIRE), OR ASTM C 1032 (WOVEN WIRE), AND LOCAL BUILDING CODE REQUIREMENTS.
3. ALL ACCESSORIES INCLUDING CORNER AIDS, CONTROL AND EXPANSION JOINTS, CASING BEADS, ETC. ARE PROPERLY FASTENED AND POSITIONED ACCORDING TO CONTRACT DRAWINGS AND LOCAL BUILDING CODE REQUIREMENTS.
4. THE WATER-RESISTIVE BARRIER (IF SPECIFIED) IS OF A PROPER TYPE AND HAS BEEN INSTALLED IN A WEATHERBOARD FASHION IN ACCORDANCE WITH BUILDING CODE AND MANUFACTURER'S REQUIREMENTS.
5. DOORS, WINDOWS, DECKS, AND OTHER OPENINGS AND PENETRATIONS HAVE BEEN PROPERLY FLASHED IN ACCORDANCE WITH BUILDING CODE AND CONTRACT DOCUMENTS AND COMMERCIAL CEMENT PLASTER 1 INSTALLATION DETAILS DS824.
6. METAL ROOF FLASHING HAS BEEN INSTALLED IN ACCORDANCE WITH THE MANUFACTURER'S REQUIREMENTS, ASPHALT ROOFING MANUFACTURERS ASSOCIATION (ARMA) STANDARDS AND COMMERCIAL CEMENT PLASTER 1 INSTALLATION DETAILS DS824, OR AS OTHERWISE NECESSARY TO MAINTAIN A WATERTIGHT ENVELOPE.
7. THE SUBSTRATE IS FLAT WITHIN 1/4 IN (6.4 MM) IN 10 FT (3.0 M).
8. THE CONTRACTOR SHALL NOTIFY THE GENERAL CONTRACTOR AND/OR OWNER AND/OR ARCHITECT OF ALL DISCREPANCIES. DO NOT PROCEED UNTIL UNSATISFACTORY CONDITIONS ARE RESOLVED.
3.02 PREPARATION
A. PROTECTION
1. THE COMMERCIAL CEMENT PLASTER 1 MATERIALS SHALL BE PROTECTED BY PERMANENT OR T TEMPORARY MEANS FROM WEATHER AND OTHER DAMAGE PRIOR TO, DURING, AND FOLLOWING APPLICATION, UNTIL DRY.
2. PROTECT ADJOINING WORK AND PROPERTY.
B. SOLID SURFACES SUCH AS PRECAST OR CAST-IN-PLACE CONCRETE OR MASONRY, SHALL HAVE ADEQUATE SUCTION AND SURFACE ROUGHNESS TO PROVIDE BOND. SMOOTH OR NON-ABSORPTIVE SURFACES SHALL BE PREPARED BY THE FOLLOWING METHODS:
1. SANDBLASTING, WIRE BRUSHING, ACID ETCHING, CHIPPING OR ANY COMBINATION THEREOF. REFER TO ASTM D 4258, ASTM D 4259 ASTM D 4260, OR ASTM D 4261 AS APPLICABLE.
2. APPLICATION OF AN APPROVED BONDING AGENT.
3. WHERE EFFECTIVE BOND CANNOT BE ACHIEVED, THE ENTIRE SURFACE SHALL BE COVERED WITH FURRED METAL LATH IN ACCORDANCE WITH ASTM C 1063 AND BUILDING CODE REQUIREMENTS.
3.03 INSTALLATION
A. MIXING AND APPLICATION INSTRUCTIONS - REFER TO THE PRODUCT LITERATURE FOR SPECIFIC MIXING AND APPLICATION INSTRUCTIONS OF EACH PRODUCT.
B. CCP BASE SHALL BE MOIST CURED FOR A MINIMUM OF 48 HOURS FOLLOWING APPLICATION.
C. CCP BASE SHALL BE COMPLETELY DRY AND CURED FOR A MINIMUM OF 7 DAYS PRIOR TO APPLICATION OF PRIMER AND FINISH.
D. THE INSTALLATION OF MACHINE COATED DRYVIT EPS SHAPES AND STARTER BOARDS SHALL BE IN ACCORDANCE WITH DRYVIT PUBLICATION DS854.
3.04 FIELD QUALITY CONTROL
A. THE LATH AND WATER-RESISTIVE BARRIER INSTALLATION SHALL BE INSPECTED AS REQUIRED BY THE LOCAL BUILDING DEPARTMENT PRIOR TO PLASTER MATERIALS BEING APPLIED.
B. THE CONTRACTOR SHALL BE RESPONSIBLE FOR THE PROPER APPLICATION OF THE COMMERCIAL CEMENT PLASTER 1 MATERIALS.
C. DRYVIT ASSUMES NO RESPONSIBILITY FOR ON-SITE INSPECTIONS OR APPLICATION OF ITS PRODUCTS.
3.05 CLEANING
A. ALL EXCESS COMMERCIAL CEMENT PLASTER 1 MATERIALS SHALL BE REMOVED FROM THE JOB SITE BY THE CONTRACTOR IN ACCORDANCE WITH CONTRACT PROVISIONS.
B. ALL SURROUNDING AREAS, WHERE THE DRYVIT COMMERCIAL CEMENT PLASTER 1 HAS BEEN APPLIED, SHALL BE LEFT FREE OF DEBRIS AND FOREIGN SUBSTANCES RESULTING FROM THE CONTRACTOR'S WORK.
3.06 PROTECTION
A. THE COMMERCIAL CEMENT PLASTER 2 MATERIALS SHALL BE PROTECTED FROM WEATHER AND OTHER DAMAGE UNTIL PERMANENT PROTECTION IN THE FORM OF FLASHINGS, SEALANTS, ETC. ARE INSTALLED.

SECTION 09245 - COMMERCIAL CEMENT PLASTER 2
PART I - GENERAL
1.01 SUMMARY:
THIS DOCUMENT IS INTENDED TO BE USED IN PREPARING SPECIFICATIONS FOR PROJECTS UTILIZING COMMERCIAL CEMENT PLASTER 2 BY DRYVIT APPLIED TO PROPERLY FRAMED AND SHEATHED EXTERIOR WALL ASSEMBLIES.
1.02 REFERENCES
A. INTERNATIONAL BUILDING CODES (IBC AND IRC)
B. AMERICAN CONCRETE INSTITUTE ACI 524R: GUIDE TO PORTLAND CEMENT PLASTERING
C. PORTLAND CEMENT ASSOCIATION: PORTLAND CEMENT PLASTER (STUCCO) MANUAL
D. ASTM A 526: STEEL SHEET, HOT-DIP GALVANIZED, COMMERCIAL QUALITY
E. ASTM C 150: STANDARD SPECIFICATION FOR PORTLAND CEMENT
F. ASTM C 754: STANDARD SPECIFICATION FOR INSTALLATION OF STEEL FRAMING MEMBERS TO RECEIVE SCREW-ATTACHED GYPSUM PANEL PRODUCTS
G. ASTM C 847: STANDARD SPECIFICATION FOR METAL LATH
H. ASTM C 897: STANDARD SPECIFICATION FOR AGGREGATE FOR JOB MIXED PORTLAND CEMENT BASED PLASTERS
I. ASTM C 920 STANDARD SPECIFICATION FOR ELASTOMERIC JOINT SEALANTS
J. ASTM C 926: STANDARD SPECIFICATION FOR APPLICATION OF PORTLAND CEMENT-BASED PLASTER
K. ASTM C 933: STANDARD SPECIFICATION FOR WELDED WIRE LATH
L. ASTM C 1007: STANDARD SPECIFICATION FOR INSTALLATION OF LOAD BEARING (TRANSVERSE AND AXIAL) STEEL STUDS AND RELATED ACCESSORIES.
M. ASTM C 1032: STANDARD SPECIFICATION FOR WOVEN WIRE PLASTER BASE
N. ASTM C 1063: STANDARD SPECIFICATION FOR INSTALLATION OF LATHING AND FURRING TO RECEIVE INTERIOR AND EXTERIOR PORTLAND CEMENT-BASED PLASTER
O. ASTM C 1328: STANDARD SPECIFICATION FOR PLASTIC (STUCCO) CEMENT
P. ASTM D 226: STANDARD SPECIFICATION FOR ASPHALT SATURATED ORGANIC FELT USED IN ROOFING AND WATERPROOFING
Q. ASTM D 4258: STANDARD PRACTICE FOR SURFACE CLEANING CONCRETE FOR COATING
R. ASTM D 4259: STANDARD PRACTICE FOR ABRADING CONCRETE
S. ASTM D 4260: STANDARD PRACTICE FOR ACID ETCHING CONCRETE
T. ASTM D 4261: STANDARD PRACTICE FOR SURFACE CLEANING CONCRETE MASONRY UNITS FOR COATING
U. ASTM D 1784: STANDARD SPECIFICATION FOR RIGID POLY (VINYL CHLORIDE) (PVC) COMPOUNDS AND CHLORINATED POLY (VINYL CHLORIDE) (CPVC) COMPOUNDS
V. ICC-ES AC11: CEMENTITIOUS EXTERIOR WALL COATINGS
1.03 SUBMITTALS
A. SUBMITTAL REQUIREMENTS BY THE CONTRACTOR ARE TO BE INDICATED IN THE CONSTRUCTION DOCUMENTS AS REQUIRED, INCLUDING:
1. PRODUCT LITERATURE, SAMPLES OR MOCK UP.
2. FINISH SAMPLE INDICATING COLOR AND TEXTURE FOR APPROVAL BY ARCHITECT/OWNER.
1.04 DESCRIPTION
A. COMMERCIAL CEMENT PLASTER 2 CONSISTS OF DRYVIT CCP BASE - SANDED OR CONCENTRATE, DRYVIT ACRYLIC PRIMER AND DRYVIT ACRYLIC COATING OR FINISH. CCP BASE IS APPLIED DIRECTLY TO THE PROPERLY INSTALLED METAL LATH (AS SPECIFIED).
1. DESIGN REQUIREMENTS:
A. SUBSTRATES SHALL COMPLY WITH LOCAL CODE REQUIREMENTS AND PRACTICES FOR USE UNDER CEMENT PLASTER AND SHALL BE WOOD OR METAL FRAMED WALL ASSEMBLIES SHEATHED WITH APPROVED SUBSTRATES AS FOLLOWS:
1) EXTERIOR GRADE GYPSUM SHEATHING MEETING ASTM C 1396 (FORMERLY C 79) REQUIREMENTS FOR WATER RESISTANT CORE OR TYPE X CORE AT THE TIME OF APPLICATION OF THE COMMERCIAL CEMENT PLASTER SYSTEM 2.
2) EXTERIOR SHEATHING HAVING A WATER-RESISTANT CORE WITH FIBERGLASS MAT FACERS MEETING ASTM C 1177.
3) EXTERIOR FIBER REINFORCED CEMENT OR CALCIUM SILICATE BOARDS.
4) APA EXTERIOR OR EXPOSURE 1 RATED PLYWOOD, GRADE C-D OR BETTER, NOMINAL 1/2 IN (12.7 MM), MINIMUM, INSTALLED WITH THE C FACE OUT.
5) APA EXTERIOR OR EXPOSURE 1 FIRE RETARDANT TREATED (FRT) PLYWOOD, GRADE C-D OR BETTER, NOMINAL 1/2 IN (12.7 MM), MINIMUM, INSTALLED WITH THE C FACE OUT.
6) APA EXPOSURE 1 RATED ORIENTED STRAND BOARD (OSB) NOMINAL 1/2 IN (12.7 MM), MINIMUM. NOTE: APPLICATIONS OVER OSB SHEATHING REQUIRES A MINIMUM OF 2 COATS OF BACKSTOP NT - SMOOTH OR SPRAY. BACKSTOP NT - TEXTURE IS NOT RECOMMENDED OR THE FIELD OF WALL APPLICATION OVER OSB.
B. THE ROOFING MATERIALS SHALL BE LOADED ONTO THE ROOF AND INTERIOR WALLBOARD STOCKED IN THE BUILDING PRIOR TO THE INSTALLATION OF THE COMMERCIAL CEMENT PLASTER 2.
C. DEFLECTION OF SUBSTRATE SYSTEMS SHALL NOT EXCEED L/360.
D. THE SLOPE OF INCLINED SURFACES SHALL NOT BE LESS THAN 6:12 (27°) AND THE LENGTH SHALL NOT EXCEED 12 IN (305 MM).
E. SLOPES ON WINDOWSILLS PROJECTING 4 IN (102 MM) OR LESS, SHALL NOT BE LESS THAN 3:12.
F. EXPANSION JOINTS:
1) DESIGN AND LOCATION OF EXPANSION JOINTS SHALL BE DETERMINED BY THE PROJECT DESIGN PROFESSIONAL AND INDICATED ON THE CONTRACT DOCUMENTS. AS A MINIMUM, EXPANSION JOINTS IN COMMERCIAL CEMENT PLASTER 2 ARE REQUIRED AT THE FOLLOWING LOCATIONS:
A) WHERE EXPANSION JOINTS OCCUR IN THE SUBSTRATE SYSTEM.
B) WHERE BUILDING EXPANSION JOINTS OCCUR.
C) AT FLOOR LINES IN WOOD FRAME CONSTRUCTION.
D) WHERE COMMERCIAL CEMENT PLASTER 2 ABUTS DISSIMILAR MATERIALS.
E) WHERE THE SUBSTRATE CHANGES.
F) WHERE SIGNIFICANT STRUCTURAL MOVEMENT OCCURS SUCH AS CHANGES IN ROOFLINE, BUILDING SHAPE OR STRUCTURAL SYSTEM.
G. CONTROL JOINTS:
1) DESIGN AND LOCATION OF CONTROL JOINTS SHALL BE DETERMINED BY THE PROJECT DESIGN PROFESSIONAL IN ACCORDANCE WITH ASTM C 1063 AND INDICATED ON THE CONTRACT DRAWINGS. AS A MINIMUM, CONTROL JOINTS SHALL BE LOCATED AT THE FOLLOWING LOCATIONS:
A) CORNERS OF OPENINGS
B) SUCH THAT MONOLITHIC WALL AREAS DO NOT EXCEED 144 FT^2 (13.4 M^2)
C) LENGTH TO WIDTH RATIOS OF WALL AREAS SHALL NOT EXCEED 2.5:1
D) MAXIMUM SPACING OF CONTROL JOINTS SHALL NOT EXCEED 18 FT (5.5 M)
H. SEALANTS
1) SHALL MEET ASTM C 920
2) REFER TO DRYVIT PUBLICATION DS153 FOR A LIST OF SEALANTS THAT HAVE BEEN TESTED OR COMPATIBILITY WITH DRYVIT PRODUCTS.
I. VAPOR RETARDERS
1) USE AND LOCATION OF VAPOR RETARDERS WITHIN A WALL ASSEMBLY IS THE RESPONSIBILITY OF THE PROJECT DESIGNER AND SHALL COMPLY WITH LOCAL BUILDING CODE REQUIREMENTS. TYPE AND LOCATION SHALL BE NOTED ON THE CONTRACT DOCUMENTS. VAPOR RETARDERS MAY BE INAPPROPRIATE IN CERTAIN AREAS AND CAN RESULT IN CONDENSATION WITHIN THE WALL ASSEMBLY WHEN INCORRECTLY USED. REFER TO DRYVIT PUBLICATION DS159 FOR ADDITIONAL INFORMATION.
J. FLASHING SHALL BE PROVIDED AT ALL ROOF-WALL INTERSECTIONS, WINDOWS, DOORS, CHIMNEYS, DECKS, BALCONIES, AND OTHER AREAS AS NECESSARY TO PREVENT WATER PENETRATION BEHIND COMMERCIAL CEMENT PLASTER 2.
K. SITE COATED EPS SHAPES AND STARTER BOARDS: SHALL BE COATED ON SITE UTILIZING THE SAME MATERIALS EPS, BASE MATERIAL MIXTURE, REINFORCING MESH, AND FINISH) AS SPECIFIED FOR THE PROJECT.
L. PRE BASE COATED EPS SHAPES AND STARTER BOARDS: SHALL BE SUPPLIED BY ACROCORE OR OTHER APPROVED SHAPE MANUFACTURER.
2. PERFORMANCE REQUIREMENTS: AS A MINIMUM, DRYVIT COMMERCIAL CEMENT PLASTER 2 PRODUCTS SHALL MEET:
A. ASTM C 1328: STANDARD SPECIFICATION FOR PLASTIC (STUCCO) CEMENT
1.05 QUALITY ASSURANCE
A. QUALIFICATIONS:
1. MANUFACTURER: SHALL BE DRYVIT SYSTEMS, INC. OR APPROVED SUPPLIERS. ALL MATERIALS SHALL BE OBTAINED FROM DRYVIT SYSTEMS, INC. OR ITS AUTHORIZED DISTRIBUTORS.
2. PLASTERING CONTRACTOR:
A. SHALL BE KNOWLEDGEABLE IN THE PROPER INSTALLATION OF EXTERIOR LATHING AND CEMENT PLASTER PRODUCTS.
B. SHALL HAVE QUALIFIED AND PROPERLY TRAINED PEOPLE TO PERFORM WORK.
C. SHALL BE LICENSED, BONDED AND INSURED.
D. SHALL HAVE EXPERIENCE IN APPLICATION OF CEMENT PLASTER PRODUCTS ON PROJECTS OF C COMPARABLE SCOPE.
3. MACHINE COATED DRYVIT EPS SHAPES AND STARTER BOARDS: SHALL BE SUPPLIED BY ACROCORE OR OTHER MANUFACTURER THAT SUBSCRIBES TO THE DRYVIT THIRD PARTY CERTIFICATION AND QUALITY ASSURANCE PROGRAM.
B. MOCK-UP
1. THE CONTRACTOR SHALL, BEFORE THE PROJECT COMMENCES, PROVIDE THE OWNER/ARCHITECT WITH A MOCK-UP FOR APPROVAL.
2. THE MOCK-UP SHALL BE OF SUITABLE SIZE AS REQUIRED TO ACCURATELY REPRESENT EACH COLOR AND TEXTURE TO BE UTILIZED ON THE PROJECT.
3. THE MOCK-UP SHALL BE PREPARED WITH THE SAME PRODUCTS, TOOLS, EQUIPMENT AND TECHNIQUES REQUIRED FOR THE ACTUAL APPLICATIONS. THE FINISH USED SHALL BE FROM THE SAME BATCH AS THAT BEING USED FOR THE PROJECT.
4. THE APPROVED MOCK-UP SHALL BE AVAILABLE AND MAINTAINED AT THE JOB SITE.
1.06 DELIVERY, STORAGE AND HANDLING
A. ALL COMMERCIAL CEMENT PLASTER 2 MATERIALS SHALL BE DELIVERED TO THE JOB SITE IN THE ORIGINAL, UNOPENED PACKAGES WITH LABELS INTACT. QUESTIONABLE MATERIALS SHALL NOT BE USED.
B. MATERIALS SHALL BE STORED AT THE JOB SITE, AND AT ALL TIMES, IN A COOL, DRY LOCATION, OUT OF DIRECT SUNLIGHT, PROTECTED FROM WEATHER AND OTHER SOURCES OF DAMAGE. MINIMUM STORAGE TEMPERATURE SHALL BE AS FOLLOWS:
1. DPR, PMR™, HDP™, WEATHERLASTIC AND E FINISHES, COLOR PRIME, PRIMUS, GENESIS AND NCB™: 40 °F (4 °C).
C. FOR OTHER PRODUCTS, REFER TO SPECIFIC PRODUCT DATA SHEETS.
D. PROTECT ALL PRODUCTS FROM WEATHER AND DIRECT SUNLIGHT.
E. MAXIMUM STORAGE TEMPERATURE SHALL NOT EXCEED 100 °F (38 °C). NOTE: MINIMIZE EXPOSURE OF MATERIALS TO TEMPERATURES OVER 90 °F (32 °C). FINISHES EXPOSED TO TEMPERATURES OVER 110 °F (43 °C) FOR EVEN SHORT PERIODS MAY EXHIBIT SKINNING, INCREASED VISCOSITY AND SHOULD BE INSPECTED PRIOR TO USE.
1.07 PROJECT CONDITIONS
A. APPLICATION OF WET MATERIALS SHALL NOT TAKE PLACE DURING INCLEMENT WEATHER UNLESS APPROPRIATE PROTECTION IS PROVIDED. PROTECT MATERIALS FROM INCLEMENT WEATHER UNTIL THEY ARE DRY.
B. DRYVIT CCP BASE SHALL NOT BE APPLIED WHEN WALL OR AMBIENT TEMPERATURES ARE BELOW 40 °F (4 °C).
C. AT THE TIME OF DRYVIT PRODUCT APPLICATION, THE AIR AND WALL SURFACE TEMPERATURES SHALL BE FROM 40 °F (4 °C) MINIMUM TO 100 °F (38 °C) MAXIMUM FOR THE FOLLOWING PRODUCTS:
1. DPR, PMR, HDP, WEATHERLASTIC AND E FINISHES, COLOR PRIME, PRIMUS, GENESIS AND NCB.
2. FOR OTHER PRODUCTS, REFER TO SPECIFIC PRODUCT DATA SHEETS.
D. THESE TEMPERATURES SHALL BE MAINTAINED WITH ADEQUATE AIR VENTILATION AND CIRCULATION FOR A MINIMUM OF 24 HOURS (48 HOURS FOR WEATHERLASTIC FINISHES, AMERISTONE, AND TERRANEO) THEREAFTER, OR UNTIL THE PRODUCTS ARE COMPLETELY DRY. REFER TO PUBLISHED PRODUCT DATA SHEETS FOR MORE SPECIFIC INFORMATION.
E. CCP BASE SHALL BE COMPLETELY DRY AND PROPERLY CURED FOR A MINIMUM OF 7 DAYS PRIOR TO PRIMER APPLICATION.
F. IF NECESSARY, TENTING, HEATING AND VENTILATION MAY BE UTILIZED TO MAINTAIN REQUIRED CONDITIONS. HEATERS SHALL BE VENTED TO THE OUTSIDE.
G. PROTECT THE COMMERCIAL CEMENT PLASTER 2 MATERIALS FROM UNEVEN AND EXCESSIVE EVAPORATION IN DRY, WARM, OR WINDY WEATHER. ALWAYS WORK THE SHADY SIDE OF THE WALL. REFER TO SECTION 3.03.B AND 3.03.C FOR CCP BASE CURING REQUIREMENTS.
1.08 SEQUENCING AND SCHEDULING
A. INSTALLATION OF THE COMMERCIAL CEMENT PLASTER 2 SHALL BE COORDINATED WITH OTHER CONSTRUCTION TRADES.
1.09 WARRANTY
A. DRYVIT SYSTEMS, INC. SHALL PROVIDE A LIMITED WARRANTY AGAINST DEFECTIVE MATERIAL UPON WRITTEN REQUEST. DRYVIT SHALL MAKE NO OTHER WARRANTIES, EXPRESSED OR IMPLIED. DRYVIT DOES NOT WARRANT WORKMANSHIP. FULL DETAILS ARE AVAILABLE FROM DRYVIT SYSTEMS, INC.
PART II - PRODUCTS
2.01 MANUFACTURER:
A. ALL COMPONENTS OF COMMERCIAL CEMENT PLASTER 2 SHALL BE OBTAINED FROM DRYVIT OR ITS AUTHORIZED DISTRIBUTORS.
2.02 MATERIALS
A. WATER-RESISTIVE BARRIER (BY OTHERS):
1. SHALL COMPLY WITH ALL LOCAL BUILDING CODE REQUIREMENTS. MINIMUM 2 LAYERS ARE REQUIRED OVER WOOD BASED SUBSTRATES.
B. LATH (BY OTHERS): SHALL BE ONE OF THE FOLLOWING. SPECIFIC TYPE TO BE SELECTED BY DESIGNER BASED ON SPECIFIC PROJECT REQUIREMENTS.
1. SELF-FURRING DIAMOND MESH METAL LATH SHALL BE GALVANIZED, MINIMUM 2.5 LBS/SQ YD (1.4 KG/M^2) OR 3.4 LBS/YD^2 (1.9 KG/M^2) AND COMPLY WITH ASTM C 847.
2. SELF FURRING WELDED WIRE LATH, MINIMUM 16 GAUGE, SHALL BE GALVANIZED WITH OPENINGS NOT XCEEDING 2 IN X 2 IN (51 MM X 51 MM), AND COMPLY WITH ASTM C 933.
3. 3/8 IN (9.5 MM) GALVANIZED RIB LATH SHALL COMPLY WITH ASTM C 847.
4. SELF FURRING WOVEN WIRE LATH, MINIMUM 17 GAUGE, SHALL BE GALVANIZED WITH OPENINGS NOT EXCEEDING 1 1/2 IN X 1 1/2 IN (38 MM X 38 MM) MEETING ASTM C 1032.
C. ACCESSORIES (BY OTHERS).
1. YPE, STYLE AND MANUFACTURER SHALL BE INDICATED ON CONSTRUCTION DOCUMENTS.
2. DEPTH OF ACCESSORIES (GROUNDS) SHALL BE SIZED FOR THE PLASTER THICKNESS.
3. IN CORROSIVE ENVIRONMENTS, ACCESSORIES MANUFACTURED OF PVC OR ZINC ARE RECOMMENDED.
4. STEEL ACCESSORIES SHALL MEET ASTM C 841.
5. PVC ACCESSORIES SHALL MEET ASTM D 1784 AND ASTM C 1063.
D. PLASTER BASE COAT:
1. DRYVIT CCP BASE - SANDED: A FIBERGLASS REINFORCED, CEMENT PLASTER MIX UTILIZING ALKALI RESISTANT FIBERS AND PROPRIETARY CEMENTITIOUS ADMIXTURES WHICH IS FIELD MIXED WITH WATER AND DRYVIT AC-100 ACTIVATOR (WHEN SPECIFIED). CCP BASE - SANDED IS PACKAGED IN 80 LB (36.3 KG) BAGS.
E. MACHINE COATED DRYVIT EPS SHAPES AND STARTER BOARDS: SHALL BE SUPPLIED BY ACROCORE OR OTHER MANUFACTURER THAT SUBSCRIBES TO THE DRYVIT THIRD PARTY CERTIFICATION AND QUALITY ASSURANCE PROGRAM.
F. PRIMER:
1. DRYVIT COLOR PRIME™, COLOR PRIME-W™ OR PRIMER WITH SAND™: A WATER-BASED, PIGMENTED ACRYLIC PRIMER APPLIED OVER THE CURED CCP BASE COAT TO IMPROVE ADHESION AND PROVIDE A MORE UNIFORM APPEARANCE OF THE FINISH.
G. DRYVIT COATING:
1. DEMANDIT SMOOTH - INTEGRALLY COLORED SMOOTH EXTERIOR WALL COATING ENHANCED WITH PROVEN MILDEW RESISTANCE. A MINIMUM OF 2 COATS ARE REQUIRED.
H. DRYVIT FINISH(ES): 100% ACRYLIC FINISHES WITH INTEGRAL COLOR AND TEXTURE. SHALL BE THE TYPE, COLOR AND TEXTURE AS SELECTED BY THE ARCHITECT/OWNER AND SHALL BE OF THE FOLLOWING TYPES:
1. STANDARD DPR (DIRT PICKUP RESISTANCE): WATER-BASED, ACRYLIC COATING WITH INTEGRAL COLOR AND TEXTURE AND FORMULATED WITH DPR CHEMISTRY:
A. SANDPEBBLE FINE DPR: FINE PEBBLE TEXTURE
PART III - EXECUTION
3.01 EXAMINATION
A. PRIOR TO INSTALLATION OF COMMERCIAL CEMENT PLASTER 2, IT IS THE CONTRACTOR'S RESPONSIBILITY TO ENSURE THAT:
1. THE SURFACES TO RECEIVE PLASTER ARE FREE OF DUST, LOOSE PARTICLES, OIL AND OTHER CONDITIONS THAT WOULD AFFECT THE ADHESION, INSTALLATION OR PERFORMANCE OF COMMERCIAL CEMENT PLASTER 2 MATERIALS.
2. THE LATH IS OF THE PROPER TYPE, INSTALLED TIGHT, PROPERLY FASTENED, AND MEETS THE REQUIREMENTS OF ASTM C 1063, ASTM C 847 (EXPANDED METAL), ASTM C 933 (WELDED WIRE), OR ASTM C 1032 (WOVEN WIRE), AND LOCAL BUILDING CODE REQUIREMENTS.

FWH Architects
3336 Grand Blvd. Suite 201
Holiday, Florida 34690
Ph. 727. 815. 3336
FABER@FWHARCHITECTS.COM

brightwork real estate
3708 WEST SWANN AVE,
SUITE 200
TAMPA, FL 33609
PHONE: 813.874.1700

TO THE BEST OF THE KNOWLEDGE OF THE ARCHITECTS AND ENGINEERS, SAID PLANS AND SPECIFICATIONS COMPLY WITH THE APPLICABLE MINIMUM BUILDING CODES AND THE APPLICABLE MINIMUM FIRE SAFETY STANDARDS

GUY F. FABER
FL License No. AR0015323
seal

no.	date	revision descriptions
1 (2)	12.02.2025	REVISED PER COORDINATION W/ TENANT INTERIORS

CHIPOTLE MEXICAN GRILL
BUILDING SHELL
2000 NOLTE ROAD
ST. CLOUD, FLORIDA 34722

08.29.2025
date
25008
comm. no.
ARCHITECTURAL SPECIFICATIONS

G014

12/3/2025 3:51 PM

3. ALL ACCESSORIES INCLUDING CORNER AIDS, CONTROL AND EXPANSION JOINTS, CASING BEADS, ETC. ARE PROPERLY FASTENED AND POSITIONED ACCORDING TO CONTRACT DRAWINGS AND LOCAL BUILDING CODE REQUIREMENTS.
4. DOORS, WINDOWS, DECKS, AND OTHER OPENINGS AND PENETRATIONS HAVE BEEN PROPERLY FLASHED IN ACCORDANCE WITH BUILDING CODE AND CONTRACT DOCUMENTS AND COMMERCIAL CEMENT PLASTER 2 INSTALLATION DETAILS DS825.
5. METAL ROOF FLASHING HAS BEEN INSTALLED IN ACCORDANCE WITH THE MANUFACTURER'S REQUIREMENTS, ASPHALT ROOFING MANUFACTURERS ASSOCIATION (ARMA) STANDARDS AND COMMERCIAL CEMENT PLASTER 2 INSTALLATION DETAILS DS825, OR AS OTHERWISE NECESSARY TO MAINTAIN A WATERTIGHT ENVELOPE.
6. THE SUBSTRATE IS FLAT WITHIN 1/4 IN (6.4 MM) IN 10 FT (3.0 M).
7. THE CONTRACTOR SHALL NOTIFY THE GENERAL CONTRACTOR AND/OR OWNER AND/OR ARCHITECT OF ALL DISCREPANCIES. DO NOT PROCEED UNTIL UNSATISFACTORY CONDITIONS ARE RESOLVED.

3.02 PREPARATION

A. PROTECTION
1. THE COMMERCIAL CEMENT PLASTER 2 MATERIALS SHALL BE PROTECTED BY PERMANENT OR TEMPORARY MEANS FROM WEATHER AND OTHER DAMAGE PRIOR TO, DURING, AND FOLLOWING APPLICATION, UNTIL DRY.
2. PROTECT ADJOINING WORK AND PROPERTY.

B. SOLID SURFACES SUCH AS PRECAST OR CAST-IN-PLACE CONCRETE OR MASONRY, SHALL HAVE ADEQUATE SUCTION AND SURFACE ROUGHNESS TO PROVIDE BOND. SMOOTH OR NON-ABSORPTIVE SURFACES SHALL BE PREPARED BY THE FOLLOWING METHODS:
1. SANDBLASTING, WIRE BRUSHING, ACID ETCHING, CHIPPING OR ANY COMBINATION THEREOF. REFER TO ASTM D 4258, ASTM D 4259 ASTM D 4260, OR ASTM D 4261 AS APPLICABLE.
2. APPLICATION OF AN APPROVED BONDING AGENT.
3. WHERE EFFECTIVE BOND CANNOT BE ACHIEVED, THE ENTIRE SURFACE SHALL BE COVERED WITH FURRED METAL LATH IN ACCORDANCE WITH ASTM C 1063 AND BUILDING CODE REQUIREMENTS.

3.03 INSTALLATION

A. MIXING AND APPLICATION INSTRUCTIONS - REFER TO THE PRODUCT LITERATURE FOR SPECIFIC MIXING AND APPLICATION INSTRUCTIONS OF EACH PRODUCT.
B. CCP BASE SHALL BE MOIST CURED FOR A MINIMUM OF 48 HOURS FOLLOWING APPLICATION.
C. CCP BASE SHALL BE COMPLETELY DRY AND CURED FOR A MINIMUM OF 7 DAYS PRIOR TO APPLICATION OF PRIMER AND FINISH.
D. THE INSTALLATION OF MACHINE COATED DRYVIT EPS SHAPES AND STARTER BOARDS SHALL BE IN ACCORDANCE WITH DRYVIT PUBLICATION DS854.

3.04 FIELD QUALITY CONTROL

A. THE LATH AND WATER-RESISTIVE BARRIER INSTALLATION SHALL BE INSPECTED AS REQUIRED BY THE LOCAL BUILDING DEPARTMENT PRIOR TO PLASTER MATERIALS BEING APPLIED.
B. THE CONTRACTOR SHALL BE RESPONSIBLE FOR THE PROPER APPLICATION OF THE COMMERCIAL CEMENT PLASTER 2 MATERIALS.
C. DRYVIT ASSUMES NO RESPONSIBILITY FOR ON-SITE INSPECTIONS OR APPLICATION OF ITS PRODUCTS.

3.05 CLEANING

A. ALL EXCESS COMMERCIAL CEMENT PLASTER 2 MATERIALS SHALL BE REMOVED FROM THE JOB SITE BY THE CONTRACTOR IN ACCORDANCE WITH CONTRACT PROVISIONS.
B. ALL SURROUNDING AREAS, WHERE THE DRYVIT COMMERCIAL CEMENT PLASTER 2 HAS BEEN APPLIED, SHALL BE LEFT FREE OF DEBRIS AND FOREIGN SUBSTANCES RESULTING FROM THE CONTRACTOR'S WORK.

3.06 PROTECTION

A. THE COMMERCIAL CEMENT PLASTER 2 MATERIALS SHALL BE PROTECTED FROM WEATHER AND OTHER DAMAGE UNTIL PERMANENT PROTECTION IN THE FORM OF FLASHINGS, SEALANTS, ETC. ARE INSTALLED.

DIVISION 9 -- FINISHES

SECTION 09260 - GYPSUM BOARD SYSTEMS

1.1 General: Provide gypsum board systems as shown and specified.

A. Standards: Materials and installation shall conform to the following:
1. GA 214-90 "Levels of Gypsum Board Finish."
2. GA-216 "Specifications for Application and Finishing of Gypsum Board."
3. USG "SA923 Drywall/Steel Framed Systems."

2.1 Materials:

A. Manufacturer: United States Gypsum Co. (USG), (800) 874-4968, internet www.usg.com.

B. Metal framing: Comply with ASTM C 754 and ASTM C 645 for materials and sizes.
1. Partition metal framing:
a. Studs: Galvanized steel, C-shaped, sizes indicated, 20 gage "ST20"
b. Runners: Match studs, type recommended by stud manufacturer for floor and ceiling support of studs. Provide flexible ceiling runners for full height metal stud framed partitions continuous from floor to underside of structural members or deck above.

C. Ceiling and Soffit metal framing/suspension systems:
1. Small areas: Metal stud framing of appropriate size and gage for spans indicated.
2. Large areas: Furring channel "Grillage" or "Direct Suspension System" designed for concealed support of gypsum board ceilings, of proper type for use indicated.
3. Furring members: 20 gage, galvanized steel screw type, hat-shaped furring.

D. Gypsum board panels: USG "Sheetrock" complying with ASTM C1396, tapered edge face panels, 48" wide, in maximum lengths available to minimize end joint conditions, 5/8" thick.
1. General use panels: Sheetrock Regular panels.
2. Fire rated panels: Sheetrock Firecode Core panels.
3. Water-resistant: panels: Sheetrock HUMITEK panels.

E. Cement board: USG DUROCK Cement Board, 5/8" thick x manufacturer's standard width, complying with ANSI A118.9, and in maximum lengths available to minimize end-to-end butt joints.

F. Fasteners: USG Type "S" bugle head screws for metal framing, USG Type "W" bugle head screws for wood framing, manufacturer's recommended length for panel thickness indicated.

G. Trim: Galvanized steel with knurled and perforated flanges. USG Dur-A-Bead corner bead, No. 200B casing bead metal trim, No. 093 Control Joint.

H. Joint treatment: USG Joint Treatment System, utilizing "Sheetrock Brand Joint Tape", and "Sheetrock Brand Setting-Type (DURABOND)" compound for tape bedding and topping.

I. Adhesives: USG "Sheetrock Brand Setting-Type (DURABOND) 210 or 90" compound for tape bedding and topping.

J. Acoustical sealant: USG Sheetrock Acoustical Sealant, water-base type, gunnable sealant for sealing sound-rated gypsum board systems.

K. Sound attenuation insulation: USG Thermafiber unfaced 3-1/2" thick, mineral fiber insulating batts/blankets; standard lengths and widths required to coordinate with spaces insulated.

3.1 Installation

A. Install metal wall and partition framing and ceiling suspension/ support systems in accordance with USG Bulletin SA 923 and complying with ASTM C754.
1. Ceiling suspension/ support systems: Metal furring system/direct suspension or steel stud framing system.
2. Wall and partition framing:
a. Install steel studs per schedule or at spacing indicated with bottom and top runner tracks anchored to substrates. Provide flexible ceiling runner tracks at full height partitions.
b. Terminate partition stud system 4" above ceilings, except where indicated to be extended to structural support or roof deck above. Brace tops of partition framing to structure or roof deck at maximum 4'-0" on center spacing.
c. Frame openings more than 2'-0" wide with two 20 gage studs at each jamb.
d. Coordinate the installation of supplementary blocking and nailers, provided under Section 06100 work, to support shelving, millwork, toilet accessories, and similar work that cannot be adequately supported by gypsum board alone.

B. Application and Finishing: Install and finish gypsum board to comply with ASTM C 840 and Gypsum Association GA 216 "Recommended Specifications for the Application and Finishing of Gypsum Board."
1. Screw fasten all gypsum board panels.
2. Metal Trim: Install metal corner beads at external corners of gypsum board work and metal trim wherever edge of gypsum board would be exposed. Use longest practical lengths.
3. Control Joints: Locate and install control joints in accordance with USG Bulletin SA923 "Good Design Practice" recommendations.

C. Acoustical Treatment:
1. Where sound-attenuation insulation is indicated, seal gypsum board construction at perimeters, control joints, junction boxes, openings and penetrations with a continuous bead of acoustical sealant including a bead at both faces of partitions.
2. Install sound attenuation insulation at scheduled partitions and ceilings. Install insulation in single layer of required thickness. Extend full thickness over entire area to be insulated. Cut and fit tight around obstructions. Fill all voids.
3. At openings and cutouts, fill open spaces between edges of gypsum board and fixtures, cabinets, ducts, and other flush or penetrating items, with continuous bead of acoustical sealant.
4. Seal sides and backs of electrical boxes to completely close up openings and joints with a bead of acoustical treatment.

D. Finishing:
1. Comply with manufacturer's instructions for mixing, handling, and application of materials. Apply treatment at joints both directions, at flanges of trim accessories, penetrations of gypsum board (electrical boxes, piping, and similar work), fastener heads, surface defects, and elsewhere as indicated. Apply in manner that will result in each of these items being concealed when applied decoration has been completed.
2. Apply joint tape at joints between gypsum boards, except where trim accessories are indicated.
3. Interior Exposed Gypsum Board Finish: Level 5 Finish.
a. Locations: Typical for all walls and ceilings, unless otherwise indicated
b. Finish interior gypsum board by applying the following joint compounds in four coats (not including prefill of openings in base), and sand between coats and after last coat:
c. Embedding and First Coat: Setting-type joint or taping compound.
d. Fill (Second) Coat: Setting-type topping compound.
e. Fill (Third) Coat: Setting-type topping compound.
f. Finish (Fourth) Coat: Skim coat entire surface.
4. Interior Concealed Gypsum Board: Level 3 Partial Finishing.
a. Finish concealed gypsum board construction that requires finishing same as exposed gypsum board construction, except the third coat and sanding can be omitted.

E. Cement Board: Install cement board as a 16" high base at all kitchen and kitchen cook line wall types.

SECTION 09900 - PAINTS AND COATINGS

1.1 General: Provide paints and coatings as shown and specified.
A. Provide surface preparation, prime, intermediate and finish coatings for interior and exterior and existing scheduled surfaces and items.
B. Provide Tenant-selected finishes and colors for all exposed surfaces, unless otherwise indicated.

1.2 Related Documents:
A. Drawings and general provisions of the Contract, including General and Supplementary Conditions and Division 1 Specification Sections, apply to this section.

1.3 Summary:
A. This section includes surface preparation and field painting of the following:
1. Exposed exterior items and surfaces.
2. Exposed interior items and surfaces.
3. Surface preparation, priming, and finish coats specified in this Section are in addition to shop priming and surface treatment specified in other Sections.

1.4 Quality Assurance:
A. Applicator Qualifications: Engage an experienced applicator that has completed painting system applications similar in material and extent to that indicated for this Project with a record of successful in-service performance.
B. Source Limitations: Obtain block fillers, primers and undercoat materials for each coating system from the same the finish coats. manufacturer as
C. Provide lead free prime and finish coatings. All top coatings shall be mold and mildew resistant.

1.5 Delivery, Storage and Handling:
A. Deliver materials to the Project Site in manufacturer's original, unopened packages and containers bearing manufacturer's name and label, and the following information:
1. Product name or tile of material.
2. Product description (generic classification or binder type).
3. Manufacturer's stock number and date of manufacture.
4. Contents by volume, for pigment and vehicle constituents.
5. Thinning instructions.
6. Application instructions.
7. Color name and number.
8. VOC content
B. Store materials not in use in tightly covered containers in a well-ventilated area at a minimum ambient temperature of 45 degrees F (7 degrees C). Maintain containers used in storage in a clean condition, free of foreign materials and residue.
1. Protect from freezing. Keep storage area neat and orderly. Remove oily rags and waste daily. Take necessary measures to ensure that workers and work areas are protected from fire and health hazards resulting from handling, mixing and application.

1.6 Project Conditions
A. Apply water-based paints only when the temperatures of surfaces to be painted and surrounding air temperatures are between 50 and 90 degrees F (10 and 32 degrees C) unless otherwise stated on the technical data bulletin.
B. Apply solvent-thinned paints only when the temperature of surfaces to be painted and surrounding air temperatures are between 45 and 95 degrees F (7.2 and 35 degrees C).
C. Do not apply paint in snow, rain, fog, or mist, or when the relative humidity exceeds 85 percent, or at temperatures less than 5 degrees F (3 degrees C) above the dew point, or to damp or wet surfaces.
1. Painting may continue during inclement weather if surfaces and areas to be painted are enclosed and heated within temperature limits specified by manufacturer during application and drying periods.

2.1 Manufacturers:
A. Products: Subject to compliance with requirements, provide one of the products in the paint schedules.
B. Manufacturers Names: The following manufacturer is referred to in the paint schedule by use of shortened versions of the name, which is shown below:
1. PPG Industries, Inc.
2. Materials - No substitutions allowed.

2.2 Paint Materials, General
A. Material Compatibility: Provide block fillers, primers, undercoats, and finish-coat materials that are compatible with one another and the substrates indicated under conditions of service and application, as demonstrated by manufacturer based on testing and field experience.
B. Material Quality: Provide manufacturer's best-quality "professional" paint material of the various coating types specified. Paint-material containers not displaying manufacturer's product identification will not be acceptable. Colors: Color guided selected by owner and will be strictly adhered too, unless otherwise noted.
C. Exterior Coatings:

Exterior Ferrous Metals:
Preparation: Remove all visible oil, grease, soil, rust and all other soluble contaminates from steel surface. Uniformly roughen surface with 150-grit paper. Remove all dust before solvent cleaning by the use of stiff bristle brush.
Prime: (1) coat PPG; 4020PF Series Pitt-Tech Plus Int/Ext DTM Acrylic Industrial Primer (90 g/L VOC): Applied at a dry film thickness of not less than 2.0 to 4.0 mils.
Finish: (2) coats PPG; 4216 Plus HP Series Pitt-Tech Plus Semi-Gloss DTM Industrial Enamels (90 g/L VOC): Applied at a dry film thickness of not less than 2.0 to 4.0 mils.
Application: Conventional or HVLP (high volume low pressure)

Exterior and Interior Gas Piping:
Preparation: Remove all visible oil, grease, soil, rust and all other soluble contaminates from pipe surface. Remove all dust before solvent cleaning by the use of stiff bristle brush.
Prime: (1) Coat PPG; 4020PF Series Pitt-Tech Plus Int/Ext DTM Acrylic Industrial Primer (90 g/L VOC): Applied at a dry film thickness of not less than 2.0 to 4.0 mils.
Finish: (2) Coats PPG; 4216 Plus HP Series Pitt-Tech Plus Semi-Gloss DTM Industrial Enamels (90 g/L VOC): Applied at a dry thickness of not less than 2.0 to 4.0 mils film
Application: Conventional or HVLP (high volume low pressure)

Exterior Patio Railing:
Preparation: Remove all visible oil, grease, soil, loose paint, rust and all other soluble contaminates from steel surface. Remove all dust before solvent cleaning SSPC-SP1 by the use of stiff bristle brush. SSPC-SP3 may be required as a more aggressive preparation to remove loose mill scale, loose rust, loose paint and other loose detrimental foreign matter from the surface. Performance is better with more aggressive preparation.
Prime: (1) coat PPG; 95-3300 Durathane DTM Urethane Mastic (250 g/L VOC): Applied at a dry film thickness of not less than 3.0 to 5.0 mils.
Finish: (1) coat PPG; 95-3300 Durathane DTM Urethane Mastic (250 g/L VOC): Applied at a dry film thickness of not less than 3.0 to 5.0 mils.
Application: Conventional or HVLP (high volume low pressure) be done with conventional s spray or airless equipment or brush or roller.

Exterior Galvanized Metal:
Preparation: Before applying primer or other surface treatments, clean galvanized metal surface to SSPC-SP1 that could impair bond of the various coatings. Remove oil, grease and soap film before priming use of Krud Kutter Metal Clean & Etch may be required on bare or new galvanized. Surface must be clean, dry and free of contaminants, including salt deposits. Additional prep may be needed to SSPC-SP2. Schedule cleaning and painting so dust and other contaminants from the cleaning process will not fall on wet, newly painted surfaces.

Note: Some selected areas of bare concrete surfaces will require (1) coat of Perma Crete 4-503 Concrete Primer before steel installation over all concrete surfaces.

Owner Option 1:
Prime: (1) coat PPG; 6-209 SpeedHide Galvanized Metal Primer (400 g/L VOC): Applied at a dry film thickness of not less than 3.0 to 5.0 mils.
Finish: (2) coats PPG; 4216 Plus HP Series Pitt-Tech Plus Semi-Gloss DTM Industrial Enamels (90 g/L VOC): Applied at a dry thickness of not less than 2.0 to 4.0mils.

Owner Option 2:
Prime: (1) coat PPG; 97-245 Pitt-Guard DTR Epoxy Mastic Primer (263 g/L VOC): Applied at a dry film thickness of not less 4.0 to 7.0 mils.
Finish: (2) coats PPG; 95-3300 Durathane Urethane Mastic (240 g/L VOC): Applied at a dry film thickness of not less than 2.0 to 4.0 mils.

Owner Option 3 (Low VOC):
Prime: (1) coat PPG; Amerlock 2 Fast Dry VOC Compliant Epoxy (84 g/L VOC): Applied at a dry film thickness of not less than 4.0 to 6.0 mils.
Finish: (2) coats PPG; Amershield VOC Aliphatic Urethane (84 g/L VOC): Applied at a dry film thickness of not less than 5.0 to 8.0 mils.
Application: Conventional or HVLP (high volume low pressure) be done with conventional spray or airless equipment roller. or brush or roller.

Exterior CMU Primer:
CMU Preparation: Mortar should cure for at least 30 days and preferably 90 days prior to priming. Fill block with an appropriate block filler. Surfaces previously coated with water thinned cement-based paint must be prepared with extra care. If the material appears to be adhering tightly, a masonry sealer may be applied to seal the surface. Check adhesion by applying a piece of masking tape. If the sealer peels off and has loose particles, remove all chalking or crumbling material, re-seal and re-check adhesion.
Field Preparation: Surfaces to be coated must be dry, clean, sound, and free from all contamination including loose and peeling paint, dirt, grease, oil, wax, concrete curing agents and bond breakers, chalk, efflorescence, mildew, rust, product fines, and dust. Remove loose paint, chalk, and efflorescence by wire brushing, scraping, sanding, and/or pressure washing. Putty all nail holes and caulk all cracks and open seams. Sand all glossy, rough, and patched surfaces. Feather back all rough edges to sound surface by sanding.
Prime: (2) Coats PPG; Speedhide Interior/Exterior Masonry Hi Fill Latex Block Filler
Application: Brush, Roll or Spray

Exterior Stucco/EIFS Surfaces (including wet areas):
Preparation: Remove all visible oil, grease, soil and all other foreign substances with cleaning solutions and/or scrapers. Allow to dry and sand all areas that need smoothing and dust off.
Prime: (1) coat PPG; 4-603 Perma-Crete Alkali Resistant Primer (100 g/L VOC): Applied at a dry film thickness of not less than 1.2 to 1.9 mils.
Finish: (2) coats PPG; 4-22 Perma-Crete Hi-Build Acrylic (100 g/L VOC): Applied at a dry film thickness of not less than 3.2 to 5.8 mils.
Application: Airless spray with back roll using 3/4" nap roller.

Exterior Wood:
Preparation: Remove all visible oil, grease, soil and all other foreign substances with cleaning solutions and or scrapers. Allow to dry and sand all areas that need smoothing and dust off.
Prime: (1) coat PPG; 17-921 Seal Grip Primer Sealer (100 g/L VOC): Applied at a dry film thickness of not less than 2.0 to 4.0 mils.
Finish: (2) coats PPG; 70-501 Manor Hall Exterior Semi-Gloss or PPG Acri-Shield Semi-Gloss PP649 (50 g/L VOC): Applied at a dry film thickness of not less than 1.5 to 3.0 mils.
Application: Brush, Roll or Spray

D. Interior Coatings:
Interior Metals: (Doors, door frames, where indicated)
Preparation: Remove all visible rust, oil, grease, soil and all other foreign substances with cleaning solutions and/or scrapers. Allow to dry and sand all areas that need smoothing and dust off.
Prime: (1) coat PPG; 4020PF Series Pitt-Tech Plus Int/Ext DTM Acrylic Industrial Primer (90 g/L VOC): Applied at a dry film thickness of not less than 2.0 to 4.0 mils. (Repaints only require spot prime on bare metal surfaces.)
Finish: (2) coats PPG; V-50-410 Breakthrough Semi-gloss Sheen Acrylic (250 g/L VOC): Applied at a dry film thickness of not less than 1.4 to 2.0 mils.
Application: Conventional spray, HVLP or Airless spray. Touch-ups shall be done with conventional spray or airless equipment or brush or roller.

Interior Metals: (Metal Deck if indicated on Finish Plan)
Preparation: Remove all visible rust, oil, grease, soil and all other foreign substances with cleaning solutions and allow to dry before priming.
Prime: (1) coat PPG; 4020PF Series Pitt-Tech Plus Int/Ext DTM Acrylic Industrial Primer (90 g/L VOC): Applied at a dry film thickness of not less than 2.0 to 4.0 mils. (Primer only required on unpainted decking or to spot prime bare areas in decking.)
Finish: (2) coats PPG; 90-1110 Pitt-Tech Plus Satin Acrylic (100 g/L VOC): Applied at a dry film thickness of not less than 2.0 to 4.0 mils.
Application: Conventional spray, HVLP or Airless spray. Touch-ups shall be done with conventional spray or airless equipment or brush or roller.

Interior Gyp. Bd.:
Preparation: Remove all visible oil, grease, soil and all other foreign substances with cleaning solutions. Fill hairline cracks, holes and other defects with filler compatible with finish coats. Sand smooth all areas filled and/or areas to make a smooth overall finish.
Prime: (1) coat PPG; 9-900 Pure Performance Acrylic Primer (0 g/L VOC): Applied at a dry film thickness of not less than 1.4 to 2.0 mils. (Spot prime required only on repaint projects.)
Finish: (2) coats PPG; Pure Performance Zero VOC Eggshell 9-500 Series, sheen as shown on finish plan: Applied at a dry film thickness of not less than 1.5 to 2.0 mils.
Application: Conventional spray, HVLP or Airless spray. Touch-ups shall be done with conventional spray or airless equipment or brush or roller. Interior Wood Trim and

Plywood - Clear Polyurethane Finish:
(Plywood finishes shall be shop applied in a controlled environment)
Shop Preparation: Scuff sand between coats.
Shop Finish: (2) coat, ML Campbell Krystal conversion varnish, Clear Dull Sheen
Application: Spray Field Preparation: All cuts in field are to be sanded smooth. Scuff sand between coats.
Field Finish: (2) coat, ML Campbell High Performance Pre-Cat Lacquer, Clear Dull Sheen
Application: Wipe on with t-shirt rag.

E. EXTERIOR TRAFFIC SAFETY MARKING.:
PREPARATION: ALL SURFACES MUST BE CLEAN, DRY AND FREE FROM OIL, GREASE, ANTIFREEZE, LOOSE SAND AGGREGATE AND CHIPPING/PEELING EXISTING STRIPING. ANY CURING COMPOUNDS USED ON NEW CONCRETE MUST BE MECHANICALLY ABRADED OFF PRIOR TO STRIPING. WHEN STRIPING ON FRESHLY SEALED SURFACES USE CAUTION AS SOME SEALERS CAN AFFECT THE CURING AND ADHESION OF TRAFFIC PAINT. WHEN IN DOUBT, ALWAYS TEST ADHESION.

FOR COMPLETE DRYING AND MINIMUM DIRT RETENTION WHEN STRIPING PARKING LOTS, THE LOTS SHOULD BE CLOSED TO TRAFFIC FOR TWO HOURS MINIMUM AFTER PAINTING. NEW ASPHALT AND CONCRETE SHOULD BE ALLOWED TO CURE FOR A MINIMUM OF 14 DAYS TO MAXIMIZE ADHESION AND DURABILITY.

OWNER OPTION 1:
FINISH: (1) COAT PPG; A-2886B TYPE II, WHITE ZONE MARKING - APPLIED AT A DRY FILM THICKNESS OF NOT LESS THAN 8.6 MILS.

OWNER OPTION 2:
FINISH: (1) COAT PPG; A-2886B TYPE II, YELLOW ZONE MARKING - APPLIED AT A DRY FILM THICKNESS OF NOT LESS THAN 8.6 MILS

APPLICATION: APPLYING A TEST STRIP TO DETERMINE DRY TO NO-PICKUP TIME WHEN THE HUMIDITY IS HIGHER THAN 65%. CONE WHENEVER NECESSARY.
• DO NOT HEAT PAINT IN STRIPING SYSTEM ABOVE 60 C.
• DO NOT APPLY WHEN TEMPERATURES ARE BELOW 3 C.
• DO NOT APPLY WHEN RAIN IS FORECAST.
• DO NOT APPLY WHEN TEMPERATURES ARE NEAR OR BELOW THE DEW POINT OR RAIN IS FORECAST WITHIN 1 HOUR.
• DO NOT THIN MORE THAN 5% WITH ACETONE AND THEN USE IMMEDIATELY.
• DO NOT APPLY IF TEMPERATURE IS EXPECTED TO FALL BELOW FREEZING FOR 6 HOURS AFTER APPLICATION OF PAINT.

APPLICATION EQUIPMENT: APPLY WITH A HIGH QUALITY BRUSH, ROLLER, OR BY AIRLESS SPRAY EQUIPMENT.

AIRLESS SPRAY: PRESSURE 2000 PSI, TIP 0.015" - 0.021"SPRAY EQUIPMENT MUST BE HANDLED WITH DUE CARE AND IN ACCORDANCE WITH MANUFACTURER'S RECOMMENDATION. HIGH-PRESSURE INJECTION OF COATING S INTO THE SKIN BY AIRLESS EQUIPMENT MAY CAUSE SERIOUS INJURY.

BRUSH: POLYESTER/NYLON BRUSH
ROLLER: ALL-PURPOSE NAP ROLLER COVER.

F. COLOR GUIDE: REFER TO FINISH PLAN AND DRAWINGS FOR EXACT LOCATION OF ALL COLORS.

WHERE	WHAT	COLOR	SHEEN	FINISH TAG
Exterior Traffic Safety Marking	PPG A-2886B Type II, Low VOC Acrylic Fast Dry Solvent	PPG White Zone Marking	Satin	N/A
Exterior Traffic Safety Marking	PPG A-2886B Type II, Low VOC Acrylic Fast Dry Solvent	PPG Yellow Zone Marking	Satin	N/A
Exterior Galvanized Metal Flashing	PPG Pitt-Tech Plus Satin Acrylic Finish 90-1110 Series	PPG 1001-6 "Knight's Armor"	Satin	N/A
Exterior (Roof Mounted) Gas Piping	PPG Pitt-Tech Plus Semi-Gloss Acrylic Finish 4216 Plus HP Series	Yellow	Semi-Gloss	N/A
Exterior and Interior Gas Piping, Where Exposed	PPG Pitt-Tech Plus Semi-Gloss Acrylic Finish 4216 Plus HP Series	Match surrounding finishes/verify with architect	Semi-Gloss	N/A
Exterior CMU Primer	PPG Speedhide Interior/Exterior Masonry Hi Fill Latex Block Filler	White	Flat	N/A
Exterior CMU	PPG Pitt-Tech Plus Semi-Gloss Acrylic Finish 4216 Plus HP Series	PPG 1001-6 "Knight's Armor"	Semi-Gloss	N/A
Exterior Ferrous Metals	PPG Pitt-Tech Plus Semi-Gloss Acrylic Finish 4216 Plus HP Series	PPG 1001-6 "Knight's Armor"	Semi-Gloss	N/A
Exterior Wood	PPG Manor Hall Acrylic Semi-Gloss 70-501 Series or PPG Acri-Shield Acrylic Semi-Gloss PP649 Series	PPG 1001-6 "Knight's Armor"	Semi-Gloss	N/A
Exterior Stucco and EIFS Patio and Wet Areas	PPG Perma-Crete High Build Acrylic Topcoat 4-22 Series	PPG 1001-6 "Knight's Armor"	Flat	N/A
Exterior Stucco and EIFS Patio and Wet Areas	PPG Perma-Crete High Build Acrylic Topcoat 4-22 Series	PPG 1010-2 "Fog" Flat		N/A
Exterior Stucco and EIFS Patio and Wet Areas	PPG Perma-Crete High Build Acrylic Topcoat 4-22 Series	PPG 1058-7 "Autumn Ridge"	Flat	N/A
Interior Doors, Door Frames, Rails and Rail Frames, Where Specified	PPG Breakthrough 50 Acrylic Satin	PPG V51-90 Black Satin		D1
Interior Ferrous Metals, Where Specified	PPG Breakthrough 250 Acrylic Eggshell V50-410 Series	PPG 1013-5 "Victorian Pewter"	Eggshell	N/A
Dining Room and Hallway Gyp. Bd.	PPG Pure Performance Zero VOC Semi-Gloss 9-500 as indicated on finish plan	PPG 1001-3 "Thin Ice"	Semi-Gloss	P4
Dining Room and Hallway Gyp. Bd.	PPG Pure Performance Zero VOC Eggshell 9-310 as indicated on finish plan	PPG 1001-3 "Thin Ice"	Eggshell	P3
Dining Room and Hallway Gyp. Bd. Ceiling	PPG Pure Performance Zero VOC Flat 9-100 Series or PPG Speedhide 6-4110XI Flat	PPG 1041-1 "Moonlit Snow"	Flat	C3
Restroom, Cooking, Kitchen and Serving Area Soffit Gyp. Bd.	PPG Pure Performance Zero VOC Eggshell 9-500 Series	PPG 1041-1 "Moonlit Snow"	Eggshell	C3
Interior Metal Roof Deck and Metal Columns	PPG Pitt-Tech Plus Satin Acrylic Finish 90-1110 Series	PPG 1013-5 "Victorian Pewter"	Satin	C1
Patio Railing	Durethane DTM Urethane 95-3300 Series	PPG 1001-6 "Knight's Armor"	Gloss	N/A

3.1 Installation:
A. Examination:
1. Verify that site environmental conditions are appropriate for application of coatings specified.
2. Immediately prior to coating application, ensure that surfaces to receive coatings are dry.
3. Ensure that moisture-retaining substrates to receive coatings have moisture content within tolerances allowed by coating manufacturer, using moisture measurement techniques recommended by coating manufacturer.
4. Immediately prior to coating application, examine surfaces to receive coatings for surface imperfections and for contaminants which could impair performance or appearance of coatings, including but not limited to, loose primer, rust, scale, oil, grease, mildew, algae, or fungus, stains or marks, cracks, indentations, or abrasions.
5. Correct the above conditions and any other conditions which could impair performance or appearance of coatings in accordance with specified surface preparation procedures before proceeding with coating application.
B. Preparation:
1. Do not start work until surfaces to be finished are in proper condition to produce finished surfaces of uniform, satisfactory appearance.
2. Stains and Marks: Remove completely, if possible, using materials and methods recommended by coating manufacturer; seal with shellac or other coating acceptable to paint manufacturer stains and marks that might bleed through paint finishes which cannot be completely removed.
3. Remove or protect hardware, electrical plates, mechanical grilles and louvers, lighting fixture trim, and other items not indicated to receive coatings which are adjacent to surfaces to receive coatings.
4. Remove mildew from impervious surfaces by scrubbing with solution of disodium phosphate and bleach. Rinse with clean water and allow substrate to thoroughly dry.
5. For specific substrate preparation, see individual specifications.
6. Provide necessary staging, ladders, shield, protective coverings and drop cloths. Protect floors, walls and adjacent work and materials. Remove and properly replace temporary protection and coverings removed from any part of the work or finish. Repair damage at Contractor's expense.
C. Application:
1. General: Mix, prepare and apply paint according to manufacturer's written instructions.
a. Use applicators and techniques best suited for substrate and type of material being applied.
b. Do not apply high-performance coatings over dirt, rust, scale, grease, moisture, scuffed surfaces, or conditions detrimental to forming a durable coating film.
c. Coating surface treatments, and finishes are indicated in the coating system descriptions.
d. Provide finish coats compatible with primers used.
e. The term "exposed surfaces" includes areas visible when permanent or built-in fixtures, convector covers, grilles, covers for finned-tube radiation, and similar components are in place. Extend coatings in these areas, as required, to maintain system integrity and provide desired protection.
2. Application Procedures: Apply coatings by brush, roller, spray, or other applicators according to manufacturer's instructions. written
a. The number of coats and film thickness required is the same regardless of application method.
b. Completed Work: Match approved Samples for color, texture, and coverage. Remove, refinish, or recoat work that does not comply with specified requirements as directed by Tenant. Paints and coatings work is subject to acceptance by Tenant. the
c. Keep brushes and rollers clean, free from contamination and suitable for the finish required.
d. Unless otherwise indicated, allow exterior paints to dry for 48 hours and interior paints to dry for 24 hours between coats.
e. Sand lightly and remove dust between coats to achieve required finish.
f. Finished surfaces shall be uniform in finish and color and free of brush marks, sagging, holidays, corduroy and other imperfections. Coverage and hide shall be complete.
g. Edges of paint or finish adjoining other materials or colors shall be sharp and clean without overlapping. Cut paint in neatly around glass or other edges.
h. Paints and coatings work is subject to acceptance by the Tenant. Correct unsatisfactory work not complying with these specifications as directed by the Tenant.
D. Cleaning:
1. After completing painting, clean glass and paint spattered surfaces. Remove spattered paint by washing and scraping without scratching or damaging adjacent finished surfaces.
E. Protection:
1. Protect work of other trades, whether being painted or not, against damage from painting. Correct damage by cleaning, repairing or replacing, and repainting, as approved by Architect / Tenant.
2. Provide "Wet Paint" signs to protect newly painted finishes. After completing painting operations, remove temporary protective wrappings provided by others to protect their work.
3. After work of other trades is complete, touch up and restore damaged or defaced painted surfaces.
F. Maintenance: Furnish extra paint materials from the same production run as the materials applied in the quantities described below. Package paint materials in unopened, factory-sealed containers for storage and identify with labels describing contents. Deliver extra materials to the Tenant.
1. Provide one gallon of paint and wood stain of each type and color required for maintenance purposes. Provide original, unopened, labeled containers with color samples and a list of project use.

DIVISION 10 - SPECIALTIES

SECTION 10522 - PORTABLE FIRE EXTINGUISHES

1.1 General: Provide portable fire extinguishers as shown and specified.

A. Standards: Materials and installation shall conform to the following:
1. NFPA 10 "Standard for Portable Fire Extinguishers.

2.1 Materials:

A. Provide minimum 10 lb. capacity fire extinguishers in quantity and type complying with local code and fire regulations requirements.
1. Provide new fire extinguishers fully loaded, tested, UL and FM labeled and listed and ready for use.
2. Provide manufacturer's recommended mounting brackets and hardware.

3.1 Installation:

A. Install fire extinguishers in accordance with manufacturer's installation instructions, at heights and locations acceptable to the local fire regulations enforcement authority

FWH Architects
3336 Grand Blvd. Suite 201
Holiday, Florida 34690
Ph. 727. 815. 3336
FABER@FWHARCHITECTS.COM

brightwork real estate
3708 WEST SWANN AVE.
SUITE 200
TAMPA, FL 33609
PHONE: 813.874.1700

TO THE BEST OF THE KNOWLEDGE OF THE ARCHITECT'S AND ENGINEERS, SAID PLANS AND SPECIFICATIONS COMPLY WITH THE APPLICABLE MINIMUM BUILDING CODES AND THE APPLICABLE MINIMUM FIRE SAFETY STANDARDS

GUY F. FABER
FL License No. AR0015323
seal

no.	date	revision descriptions
1		
2		

CHIPOTLE MEXICAN GRILL
BUILDING SHELL
2000 NOLTE ROAD
ST. CLOUD, FLORIDA 34722

08.29.2025
date

25008
comm. no.

ARCHITECTURAL SPECIFICATIONS

G015

12/3/2025 2:52 PM

GENERAL NOTES

STENCILS FOR PARKING MARKINGS AVAILABLE FROM PAVEMENT STENCIL COMPANY, PHONE: (800) 250-5547, EMAIL: STENCILS@PAVEMENTSTENCIL.COM

NOTE: ARCHITECTURAL SITE PLAN IS FOR REFERENCE ONLY. GC TO BUILD FROM CIVIL DRAWINGS. IF THERE IS A DISCREPANCY BETWEEN ARCHITECTURE AND CIVIL, CONTACT ARCHITECT IMMEDIATELY.

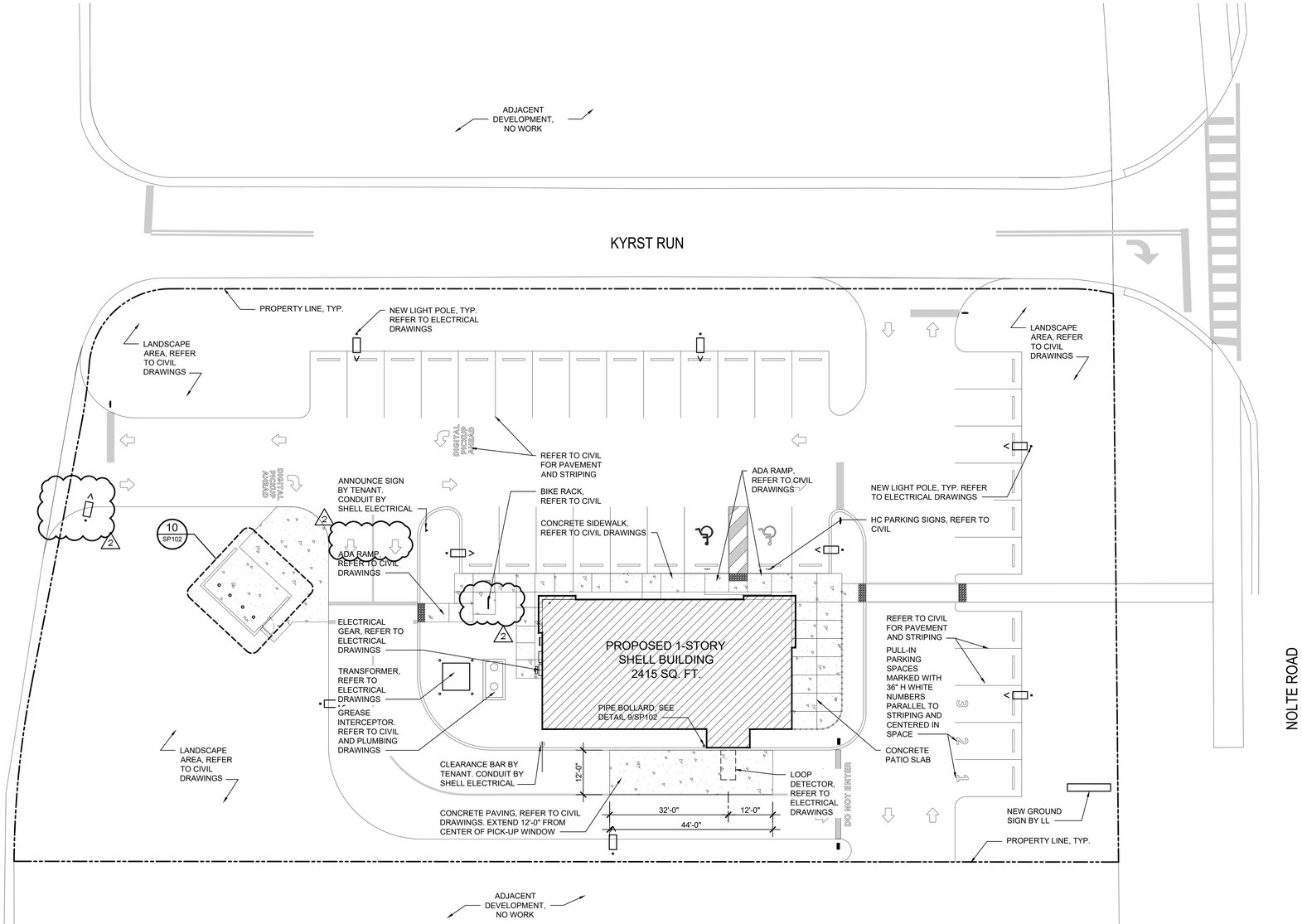

1 ARCHITECTURAL SITE PLAN

SCALE: 1/16" = 1'-0"

NORTH

FWH Architects
3336 Grand Blvd. Suite 201
Holiday, Florida 34690
Ph. 727. 815. 3336
FABER@FWHARCHITECTS.COM

brightwork real estate
3708 WEST SWANN AVE.
SUITE 200
TAMPA, FL 33609
PHONE: 813.874.1700

TO THE BEST OF THE KNOWLEDGE OF THE ARCHITECTS AND ENGINEERS, SAID PLANS AND SPECIFICATIONS COMPLY WITH THE APPLICABLE MINIMUM BUILDING CODES AND THE APPLICABLE MINIMUM FIRE SAFETY STANDARDS

GUY F. FABER
FL License No. AR0015323
seal

no.	date	revision descriptions
1	12.02.2025	REVISED PER COORDINATION W/ TENANT INTERIORS

CHIPOTLE MEXICAN GRILL
BUILDING SHELL

2000 NOLTE ROAD
ST. CLOUD, FLORIDA 34722

08.29.2025
date

25008
comm. no.

ARCHITECTURAL SITE PLAN

SP100

12/3/2025 2:52 PM

DUMPSTER ENCLOSURE FINISH SCHEDULE

MATERIAL	COLOR/FINISH
CMU WITH STUCCO	EF-2, REFER TO A300 FOR FINISH SCHEDULE
METAL COPING	PREFINISHED TO MATCH PAINTED CMU
CORRUGATED METAL & DOOR FRAMES	PAINTED 'KNIGHTS ARMOR' PPG 1001-6

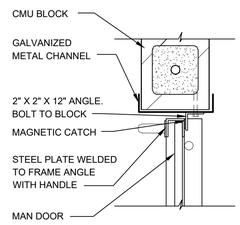

13 MAN DOOR LATCH DETAIL
SCALE: 1/2" = 1'-0"

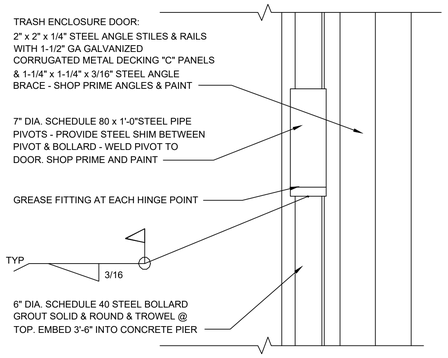

12 MAN DOOR PIVOT
SCALE: 1/2" = 1'-0"

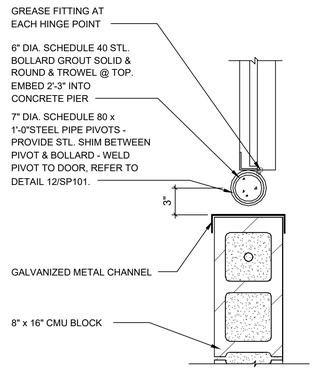

11 MAN DOOR PIVOT DETAIL
SCALE: 1/2" = 1'-0"

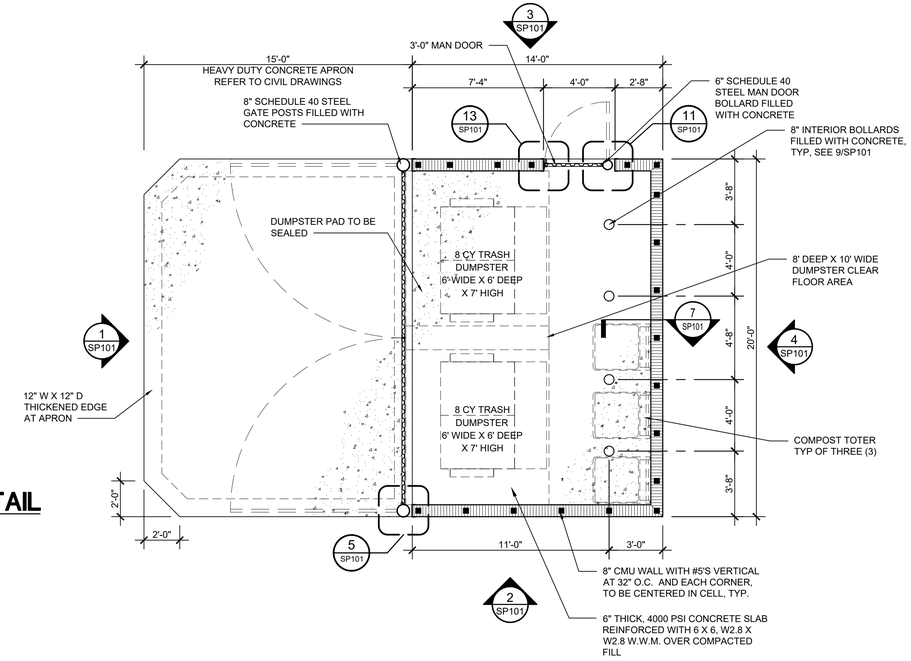

10 DUMPSTER ENCLOSURE PLAN
SCALE: 1/4" = 1'-0"

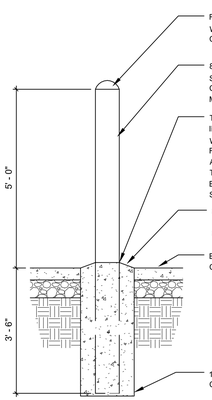

9 BOLLARD DETAIL
SCALE: 1/2" = 1'-0"

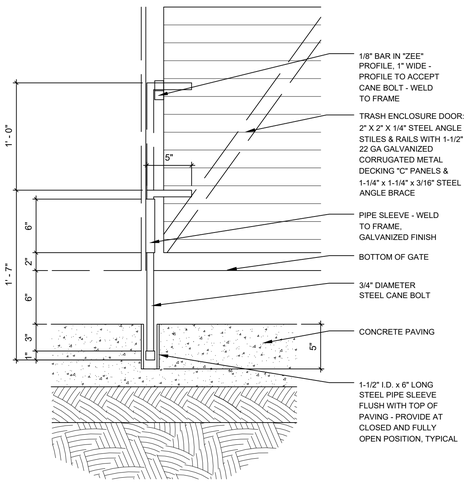

8 TYP. CANE BOLT DETAIL
SCALE: 1 1/2" = 1'-0"

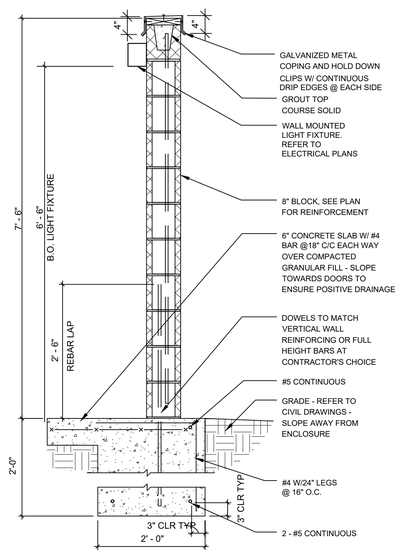

7 DUMPSTER DETAIL
SCALE: 3/4" = 1'-0"

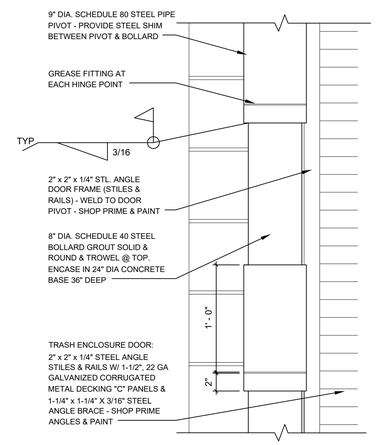

6 DUMPSTER DOOR PIVOT
SCALE: 1 1/2" = 1'-0"

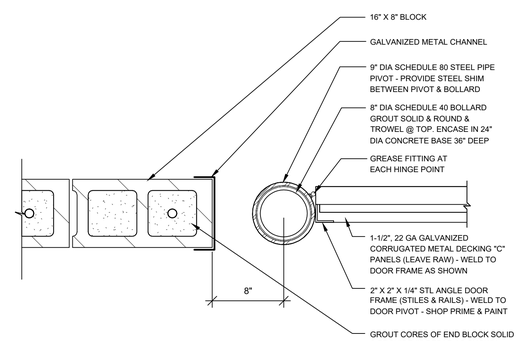

5 GATE HINGE DETAIL
SCALE: 1 1/2" = 1'-0"

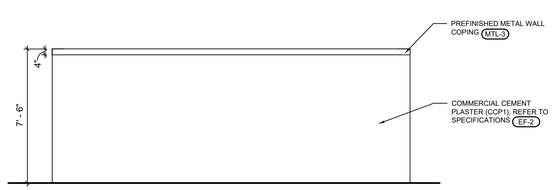

4 DUMPSTER ELEVATION
SCALE: 1/4" = 1'-0"

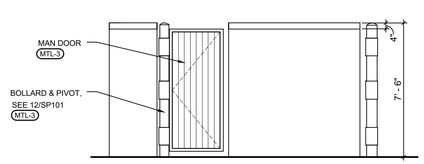

3 DUMPSTER ELEVATION
SCALE: 1/4" = 1'-0"

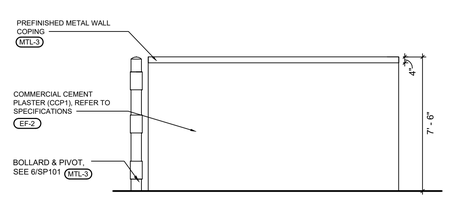

2 DUMPSTER ELEVATION
SCALE: 1/4" = 1'-0"

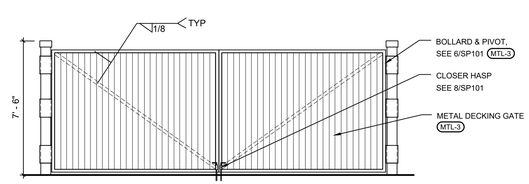

1 DUMPSTER ELEVATION
SCALE: 1/4" = 1'-0"

FWH Architects
3336 Grand Blvd. Suite 201
Holiday, Florida 34690
Ph. 727. 815. 3336
FABER@FWHARCHITECTS.COM

brightwork real estate
3708 WEST SWANN AVE.
SUITE 200
TAMPA, FL 33609
PHONE: 813.874.1700

TO THE BEST OF THE KNOWLEDGE OF THE ARCHITECT'S AND ENGINEERS, SAID PLANS AND SPECIFICATIONS COMPLY WITH THE APPLICABLE MINIMUM BUILDING CODES AND THE APPLICABLE MINIMUM FIRE SAFETY STANDARDS

GUY F. FABER
FL License No. AR0015323
seal

no.	date	revision descriptions
1		
2		

CHIPOTLE MEXICAN GRILL
BUILDING SHELL

2000 NOLTE ROAD
ST. CLOUD, FLORIDA 34722

08.29.2025
date

25008
comm. no.

DUMPSTER PLAN AND DETAILS

SP101

12/3/2025 2:52 PM

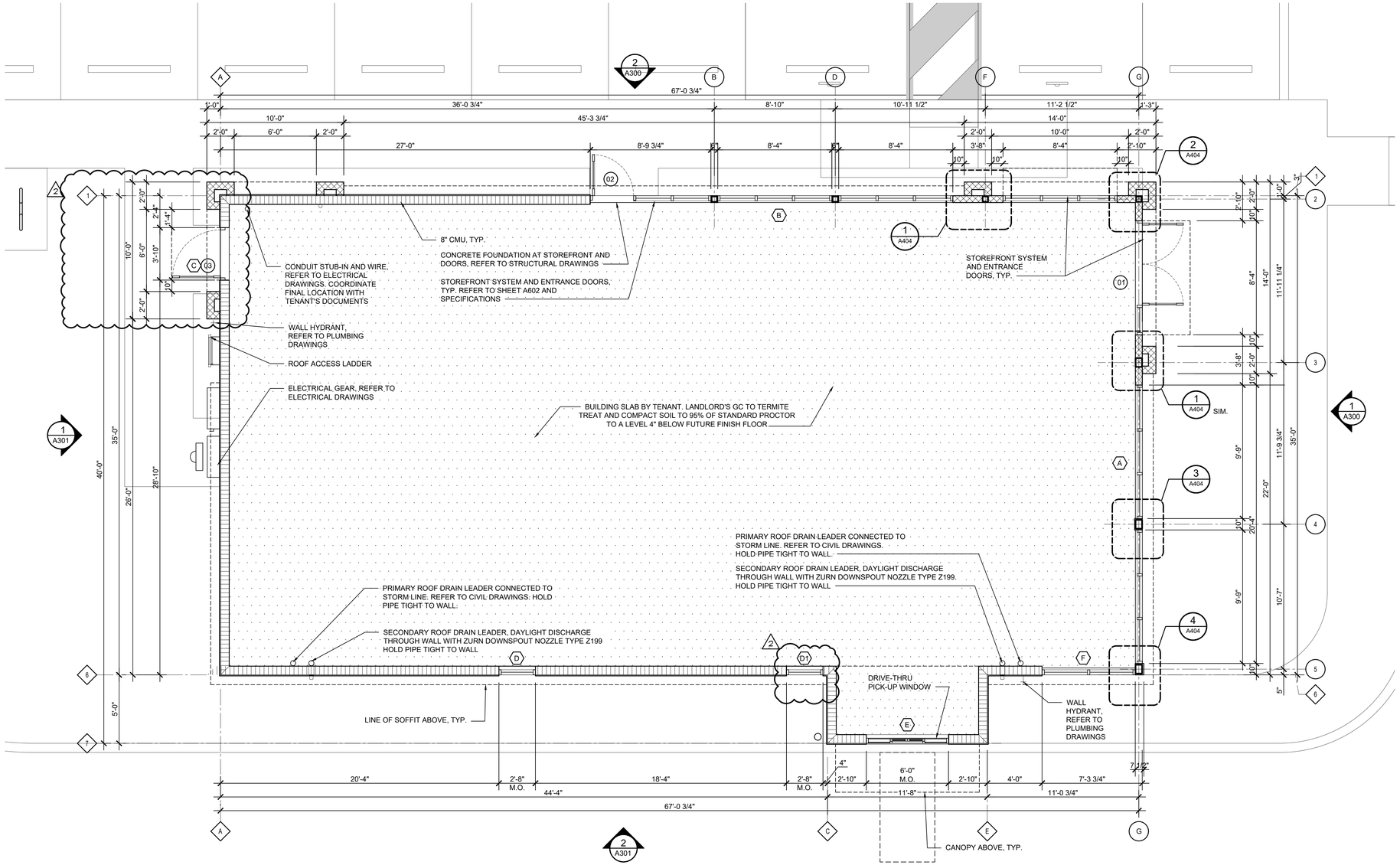

FLOOR PLAN

SCALE: 1/4" = 1'-0"

NORTH

CONSTRUCTION NOTES

1. REFER TO A601 FOR DOOR INFORMATION & A602 FOR STOREFRONT DIMENSIONS.
2. ALL DIMENSIONS ARE TO FACE OF FRAMING (STUD WALL) OR FACE OF MASONRY OR CENTERLINE OF STRUCTURE COLUMNS UNLESS NOTED OTHERWISE.
3. SEE STRUCTURAL SHEETS FOR ALL STUD FRAMING CONFIGURATIONS, SIZES, SPACING AND GAUGES.
4. ALL EXTERIOR WOOD BLOCKING TO BE MOISTURE RESISTANT PRESERVATIVE TREATED (P.T.)
5. TAPE SEALANT AT ALL ANCHOR LOCATIONS.
6. ALL FLASHING AND SEAMS BETWEEN SHEATHING IN COMPOSITE WOOD STUD WALL CONSTRUCTION CONDITIONS TO BE TAPED AND SEALED WITH TAPE SEALANT.
7. LAP ALL WEATHER RESISTANT BARRIERS AND THRU-WALL FLASHING IN A WATER SHEDDING FASHION. TAPE ALL EXPOSED EDGES.
8. EXTEND ALL THRU-WALL FLASHING TO 1/4 INCH PAST THE EXTERIOR FACE OF WALL.
9. PROVIDE CONTINUOUS ANCHORAGE FOR ALL THRU-WALL FLASHING.
10. EXTEND FLASHING VERTICALLY A MINIMUM OF 8 INCHES ABOVE THE BASE OF THE FLASHING.
11. APPLY SEALANT TO ALL SHEATHING JOINTS AND FASTENER PENETRATIONS.
12. PROVIDE FULLY ADHERED FLASHING AT ALL WINDOW AND DOOR OPENING HEADS, SILLS AND JAMBS.

FWH Architects
3336 Grand Blvd. Suite 201
Holiday, Florida 34690
Ph. 727. 815. 3336
FABER@FWHARCHITECTS.COM

brightwork real estate
3708 WEST SWANN AVE.
SUITE 200
TAMPA, FL 33609
PHONE: 813.874.1700

TO THE BEST OF THE KNOWLEDGE OF THE ARCHITECTS AND ENGINEERS, SAID PLANS AND SPECIFICATIONS COMPLY WITH THE APPLICABLE MINIMUM BUILDING CODES AND THE APPLICABLE MINIMUM FIRE SAFETY STANDARDS

GUY F. FABER
FL License No. AR0015323
seal

no.	date	revision descriptions
1	12.02.2025	REVISED PER COORDINATION W/ TENANT INTERIORS

CHIPOTLE MEXICAN GRILL
BUILDING SHELL

2000 NOLTE ROAD
ST. CLOUD, FLORIDA 34722

08.29.2025
date

25008
comm. no.

FLOOR PLAN

A100

12/3/2025 2:54 PM

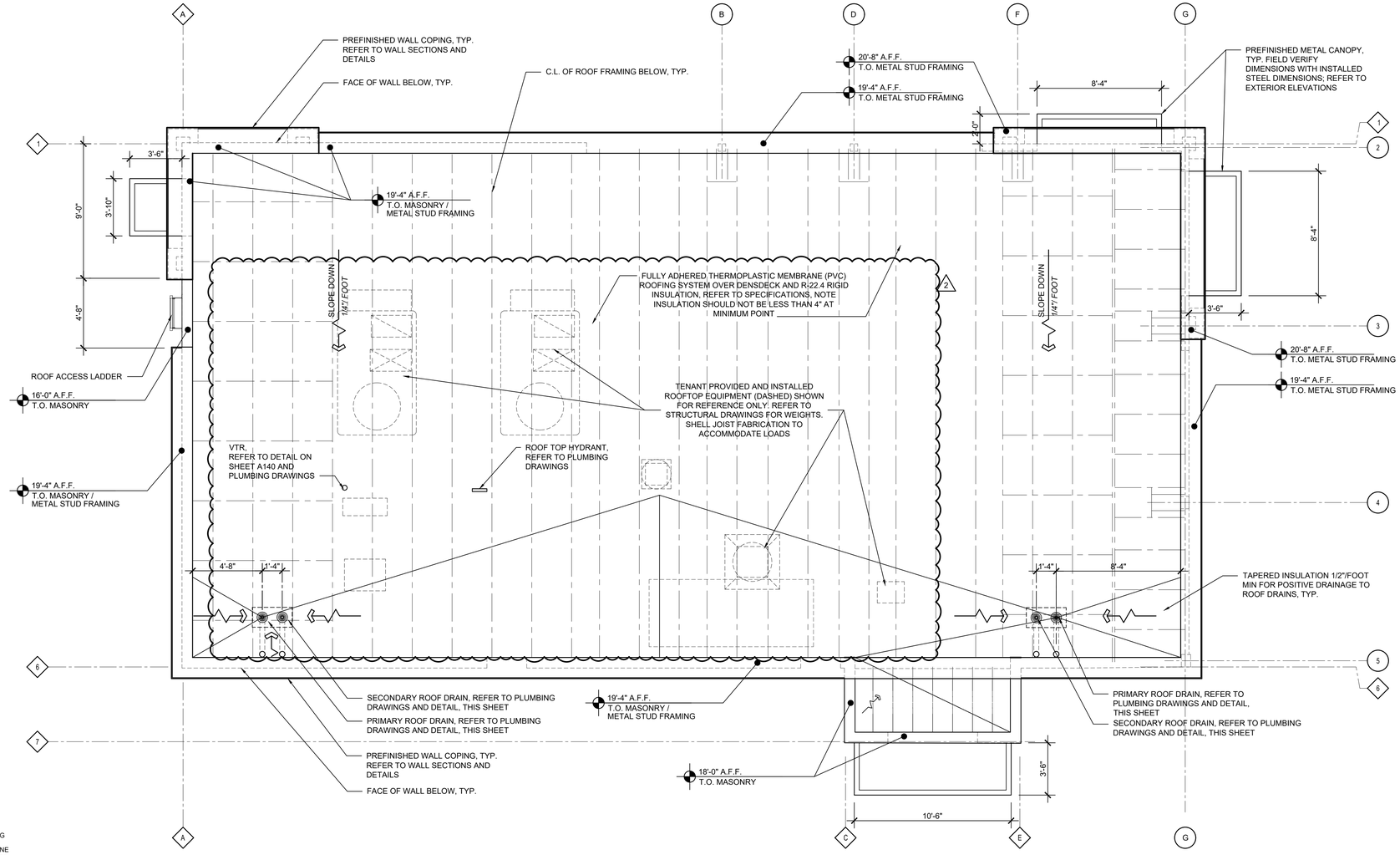

1 ROOF PLAN

SCALE: 1/4" = 1'-0"

NORTH

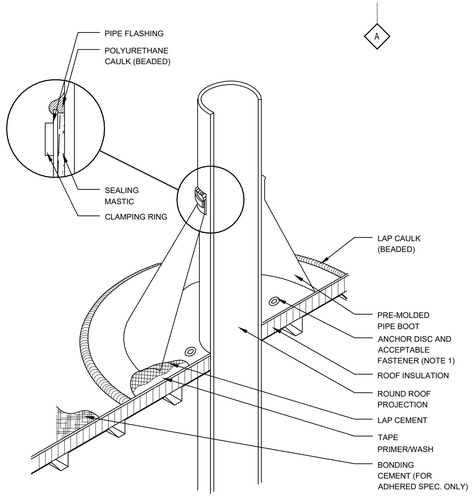

NOTE:

1. WITH MECHANICALLY FASTENED OR BALLASTED SPECIFICATIONS, MEMBRANE MUST BE MECHANICALLY ATTACHED WITH 2" (50 mm) ANCHOR DISC AND ACCEPTABLE FASTENERS (MINIMUM OF 4 PER PIPE).
2. DO NOT OVERLAP THE FLANGES FROM ADJACENT PIPE FLASHINGS.
3. ANY SEAM UNDER BOOT FLANGE TO BE TREATED AS T-JOINT.
4. BOTH SURFACES TO BE MATED MUST BE CLEANED WITH TAPE PRIMER/WASH. TAPE PRIMER/WASH MUST BE COMPLETELY DRY AND TACK FREE BEFORE APPLYING LAP CEMENT.

2 BOOT DETAIL

SCALE: 1 1/2" = 1'-0"

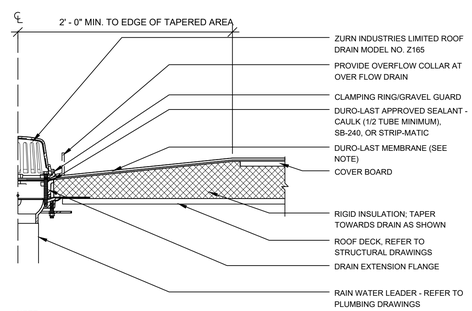

NOTE:
DURO-LAST MEMBRANE MUST EXTEND BEHOND THE INSIDE OF THE CLAMPING RING. BE SURE THE OPENING WHERE WATER PASSES THROUGH THE MEMBRANE IS NOT SMALLER THAN THE OPENING OF THE DRAIN.

3 ROOF DRAIN DETAIL

SCALE: 1 1/2" = 1'-0"

PRE-ENGINEERED CANOPY NOTE:

THE GENERAL CONTRACTOR SHALL SUBMIT FOR REVIEW AND APPROVAL TO THE BUILDING DEPARTMENT ENGINEERED CANOPY SHOP DRAWINGS SHOWING CONNECTIONS TO THE BUILDING

GENERAL NOTES

1. SEE STRUCTURAL DRAWINGS FOR LOCATIONS AND SIZE OF STRUCTURAL ROOF REINFORCEMENTS.
3. COORDINATE ALL ROOF PENETRATIONS, FLASHING, AND REPAIR W/ TENANT ROOF TOP EQUIPMENT PRIOR TO COMMENCEMENT OF WORK.
5. JOISTS FOR SHELL BUILDING ARE TO BE DESIGNED FOR THE RTU WEIGHTS AND PLACEMENT EXHIBITED IF LOCATION OR ORIENTATION OF A UNIT MUST CHANGE, NOTIFY ARCHITECT IMMEDIATELY.

FWH Architects
3336 Grand Blvd. Suite 201
Holiday, Florida 34690
Ph. 727. 815. 3336
FABER@FWHARCHITECTS.COM

brightwork real estate
3708 WEST SWANN AVE.
SUITE 200
TAMPA, FL 33609
PHONE: 813.874.1700

TO THE BEST OF THE KNOWLEDGE OF THE ARCHITECTS AND ENGINEERS, SAID PLANS AND SPECIFICATIONS COMPLY WITH THE APPLICABLE MINIMUM BUILDING CODES AND THE APPLICABLE MINIMUM FIRE SAFETY STANDARDS

GUY F. FABER
FL License No. AR0015323
seal

no.	date	revision descriptions
1	12.02.2025	REVISED PER COORDINATION W/ TENANT INTERIORS

CHIPOTLE MEXICAN GRILL
BUILDING SHELL

2000 NOLTE ROAD
ST. CLOUD, FLORIDA 34722

08.29.2025
date

25008
comm. no.

ROOF PLAN AND DETAILS

A140

12/3/2025 2:53 PM

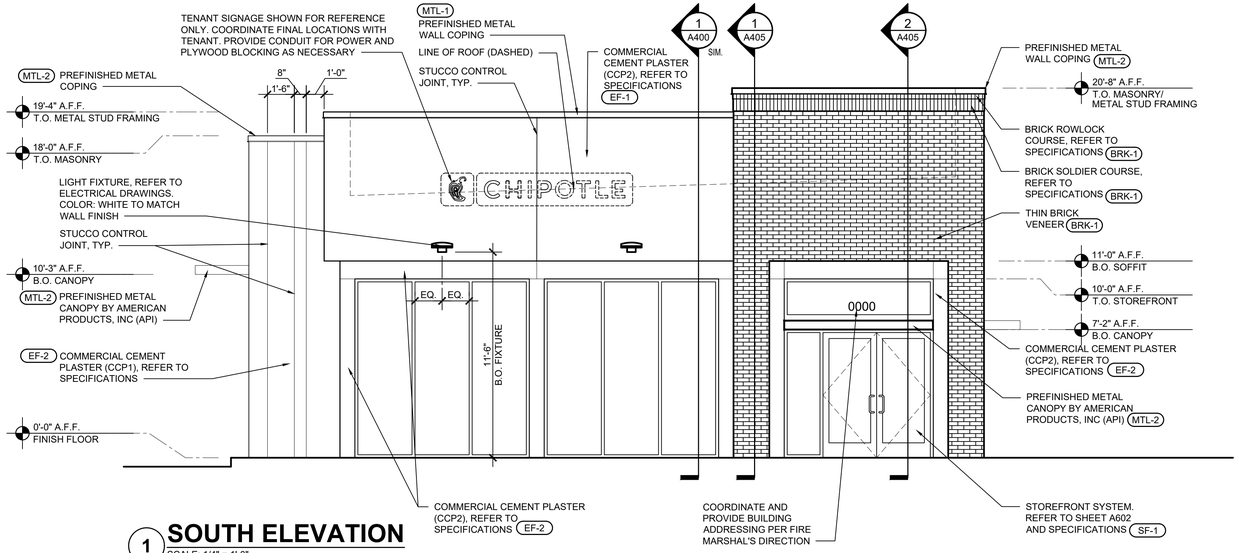

1 SOUTH ELEVATION

SCALE: 1/4" = 1'-0"

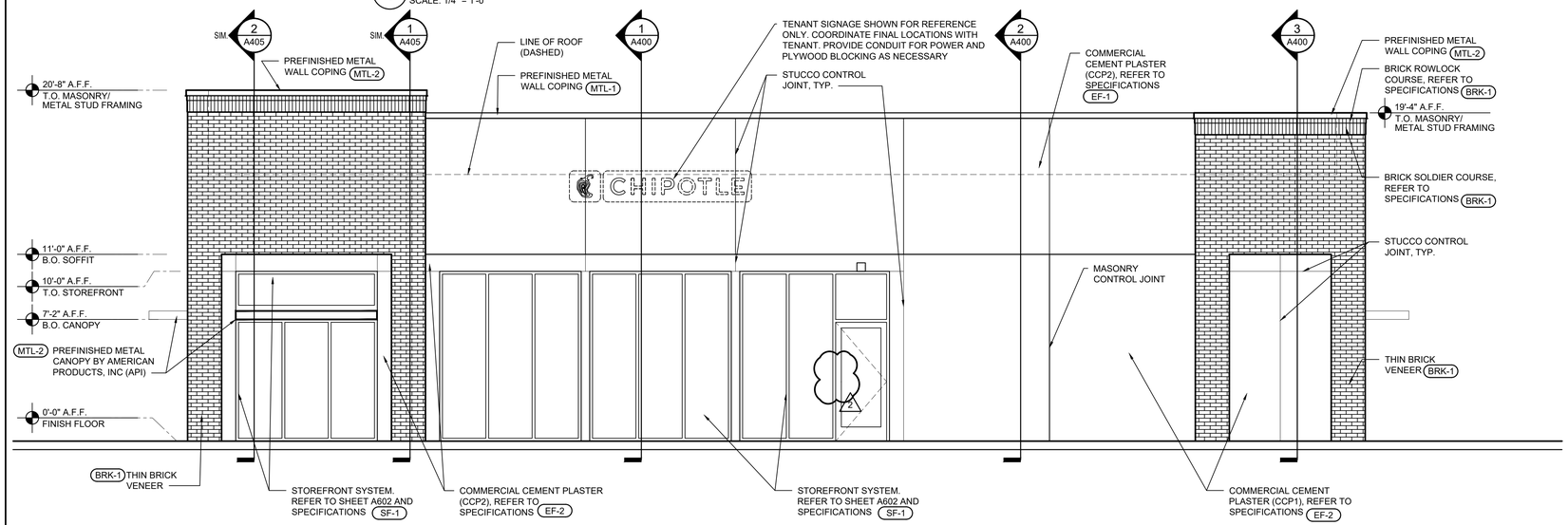

2 EAST ELEVATION

SCALE: 1/4" = 1'-0"

GENERAL NOTES

TO THE FULLEST EXTENT POSSIBLE, BUILDING COMPONENTS WILL BE MARKED AS 'TYPICAL' (TYP.). WHERE SO, KEYED NOTES WILL NOT BE DUPLICATED FOR COMPONENTS OF LIKE KIND. SHOULD THE CONTRACTOR REQUIRE CLARIFICATION OF ANY SUCH COMPONENT, A REQUEST FOR INFORMATION (RFI) SHALL BE SUBMITTED TO THE ARCHITECT PRIOR TO BID

SIGNAGE NOTES:

ANY BUILDING MOUNTED SIGNAGE DEPICTED IN THESE DOCUMENTS IS FOR COORDINATION PURPOSES ONLY AND IS NOT INTENDED FOR FABRICATION OR INSTALLATION BY THE GENERAL CONTRACTOR. IT SHALL BE UNDERSTOOD THAT ALL EXTERIOR BUILDING MOUNTED AND SITE SIGNAGE WILL BE PERMITTED SEPARATELY BY THE OWNER'S SIGN VENDOR. AT THAT TIME, COMPLETE DETAILS INCLUDING, BUT NOT LIMITED TO, SIGN FABRICATION, SIGN INSTALLATION, SIGN AREA AND QUANTITIES, ETC. SHALL BE SUBMITTED (BY THE SIGN VENDOR) FOR PERMIT AND APPROVAL PRIOR TO COMMENCEMENT OF WORK.
SEE ELECTRICAL DRAWINGS FOR POWER REQUIREMENTS

FACILITY ADDRESS REQUIREMENTS:
NEW AND EXISTING BUILDINGS SHALL HAVE APPROVED ADDRESS NUMBERS PLACED IN A POSITION TO BE PLAINLY LEGIBLE AND VISIBLE FROM THE STREET OR ROAD FRONTING THE PROPERTY

ADDRESS NUMBERS SHALL CONTRAST WITH THEIR BACKGROUND. NUMERALS SHALL BE AT LEAST 6 INCHES IN HEIGHT

WHERE ADDRESS IDENTIFICATION IS REQUIRED BY THE FIRE OFFICIAL ON OTHER ELEVATIONS OF BUILDINGS, SUCH NUMERALS SHALL NOT BE LESS THAN SIX INCHES IN HEIGHT

ADDRESS NUMBERS SHALL BE ARABIC NUMERALS OR ALPHABET LETTERS

CRITICAL NOTES

WALL FINISHES AT PARAPET RETURNS:
THE DESIGN INTENT FOR PARAPET WALLS THAT RETURN ONTO THE ROOF SURFACE IS THAT THEY, WHERE EXPOSED TO VIEW, ARE TO BE PROVIDED WITH WALL FINISHES THAT ARE CONSISTENT WITH THE ADJACENT BUILDING ELEVATIONS. FOR EXAMPLE, IF CEMENT PLASTER IS PROVIDED ALONG THE MAIN BUILDING ELEVATION, THE PARAPET RETURNS ARE TO BE PROVIDED WITH EQUAL FINISHES

THE SHELL GENERAL CONTRACTOR SHALL FULLY REVIEW AND COORDINATE WALL FINISHES WITH APPLICABLE TRADES PRIOR TO INSTALLATION. UNDER NO CIRCUMSTANCES WILL EXPOSED ROOF MEMBRANE BE ACCEPTED AS A WALL FINISH AT THE PARAPET RETURN CONDITIONS NOTED

WALL COUNTERFLASHING DETAILS:
REFER TO WALL SECTIONS AND ENLARGED DETAILS FOR THE SPECIFIED COUNTERFLASHING REQUIRED ABOVE CANOPIES, AWNINGS, PILASTER CAPS AND, WHERE APPLICABLE, TRIM MOULDING. IN SUCH CASES, THE DESIGN INTENT IS TO LIMIT THE VISIBILITY OF COUNTERFLASHINGS BY INCORPORATING LOW PROFILE OR CONCEALED FLASHINGS

THE SHELL GENERAL CONTRACTOR SHALL FULLY REVIEW AND COORDINATE ALL WALL COUNTERFLASHING REQUIREMENTS WITH THE ROOFER AND APPLICABLE TRADES PRIOR TO INSTALLATION. SHOULD CLARIFICATION OF ANY DETAIL BE NEEDED, THE SHELL GENERAL CONTRACTOR SHALL SUBMIT AN RFI TO THE ARCHITECT PRIOR TO INSTALLATION

UNDER NO CIRCUMSTANCES WILL EXPOSED SINGLE-PLY MEMBRANE BE AN ACCEPTABLE MEANS OF FLASHING AT THE CONDITIONS NOTED

EXTERIOR FINISH NOTES

EXTERIOR INSULATION FINISH SYSTEM (EIFS) REQUIREMENTS:

1. THE STANDARD FINISH COAT OVER CEMENT PLASTER SURFACES SHALL BE AN ACRYLIC EIFS FINISH COAT, "DRYVIT TAFTS" (OPTION 1) AS MANUFACTURED BY DRYVIT SYSTEMS, INC. COLORS, AS SPECIFIED ON THE EXTERIOR FINISH SCHEDULE, HAVE BEEN SELECTED FROM DRYVIT'S STANDARD COLORS. THIS SYSTEM CONSISTS OF A TINTED PRIMER AND TEXTURED ACRYLIC FINISH WITH INTEGRAL COLOR. THE SPECIFIED SYSTEM HAS A 10-YEAR MANUFACTURER WARRANTY

2. WHERE A CUSTOM COLOR IS REQUIRED FOR THE FINISH COAT OVER CEMENT PLASTER SURFACES, AN ACRYLIC EIFS FINISH COAT, "DRYVIT TAFTS" (OPTION 1) WITH STRATOTONE COLOR MATCHING SYSTEM AS MANUFACTURED BY DRYVIT SYSTEMS, INC. SHALL BE PROVIDED. CUSTOM COLORS ARE SPECIFIED ON THE EXTERIOR FINISH SCHEDULE. THIS SYSTEM CONSISTS OF A TINTED PRIMER AND TEXTURED ACRYLIC FINISH WITH INTEGRAL COLOR. THE SPECIFIED SYSTEM HAS A 5-YEAR MANUFACTURER WARRANTY

3. ALL FINISH COAT TEXTURES SHALL BE "SANDPEBBLE" UNLESS OTHERWISE NOTED

4. WHERE FOAM TRIM, CORNICE MOLDING OR OTHER SHAPES ARE SPECIFIED, COMPONENTS SHALL BE AS MANUFACTURED BY "DRYVIT SHAPES BY ACROCORE" AND SHALL BE COMPRISED OF A TYPE 1 CLASSIFICATION EXPANDED POLYSTYRENE WRAPPED IN A FLEXIBLE IMPACT RESISTANT FIBERGLASS MESH AND COATED WITH A FACTORY APPLIED POLYMER MODIFIED, FLEXIBLE CEMENT COATING

5. ALL GENERAL CONTRACTOR BIDS SHALL INCLUDE THE ABOVE STATED SYSTEMS / PRODUCTS IN THEIR BASE BIDS. SUBSTITUTIONS WILL BE CONSIDERED FOR APPROVAL BUT ONLY IF FULLY QUALIFIED IN BIDS INCLUDING COMPLETE SYSTEM / PRODUCT SPECIFICATIONS AND ASSOCIATED COSTS

ALUMINUM COPING AND DRIP EDGES:

1. ALL COMPONENTS SHALL BE PREFINISHED WITH A FACTORY APPLIED, KYNAR 500 FINISH OR MANUFACTURER EQUIVALENT.

ELECTRICAL GEAR, ROOF LADDER AND DOOR AND FRAME ON THE (REAR) FACADE:

1. ALL COMPONENTS SHALL BE PAINTED

GENERAL:

1. WHERE PLASTER REVEALS ARE NOT PREFINISHED, REVEALS SHALL BE PAINTED TO MATCH THE ADJACENT WALL COLOR UNLESS OTHERWISE NOTED

2. ALL EXPOSED, BUILDING MOUNTED UTILITIES AND CONDUITS SHALL BE PAINTED TO MATCH THE ADJACENT WALL SURFACES UNLESS OTHERWISE NOTED

THE CONTRACTOR SHALL REQUEST A COLORIZED COPY OF THE ELEVATIONS FROM THE ARCHITECT PRIOR TO ORDERING OR APPLYING EIFS, PAINT AND OTHER EXTERIOR FINISHES. THE COLORIZED ELEVATIONS WILL HELP CONFIRM COLORS AND ASSIST THE PAINTER WHERE COLOR CHANGES OCCUR

EXTERIOR FINISH SCHEDULE

CEMENT PLASTER / EIFS FINISHES - ACRYLIC DPR EIFS FINISH
WITH INTEGRAL COLOR AND TEXTURE. COLOR MATCH REFERENCED PAINTS

TAG	MANUFACTURER	SHERWIN WILLIAMS COLOR	DESCRIPTION
EF-1	DRYVIT	PPG "FOG"	CUSTOM DRYVIT COLOR
EF-2	DRYVIT	PPG "KNIGHT'S ARMOR"	CUSTOM DRYVIT COLOR
PAINT FINISHES			
PT-2	PPG	"KNIGHT'S ARMOR"	
METAL COPING, TRIM AND CANOPIES			
TAG	MANUFACTURER	COLOR	DESCRIPTION
MTL-1	TBD	MATCH EF-2 PPG "FOG"	
MTL-2	TBD	MATCH SF-1 "CHARCOAL	
ALUMINUM STOREFRONT / DRIVE-THRU PICK-UP WINDOW			
SF-1	KAWNEER	"CHARCOAL"	PERMAFLUOR COATING
SF-2	QUICKSERV	"BRONZE"	
BRICK			
BRK-1	TBD	DARK GRAY	THIN BRICK

12/3/2025 2:53 PM

FWH Architects
3336 Grand Blvd. Suite 201
Holiday, Florida 34690
Ph. 727. 815. 3336
FABER@FWHARCHITECTS.COM

brightwork real estate
3708 WEST SWANN AVE.
SUITE 200
TAMPA, FL 33609
PHONE: 813.874.1700

TO THE BEST OF THE KNOWLEDGE OF THE ARCHITECTS AND ENGINEERS, SAID PLANS AND SPECIFICATIONS COMPLY WITH THE APPLICABLE MINIMUM BUILDING CODES AND THE APPLICABLE MINIMUM FIRE SAFETY STANDARDS

GUY F. FABER
FL License No. AR0015323
seal

no.	date	revision descriptions
1	12.02.2025	REVISED PER COORDINATION W/ TENANT INTERIORS

CHIPOTLE MEXICAN GRILL
BUILDING SHELL

2000 NOLTE ROAD
ST. CLOUD, FLORIDA 34722

08.29.2025
date

25008
comm. no.

EXTERIOR ELEVATIONS

A300

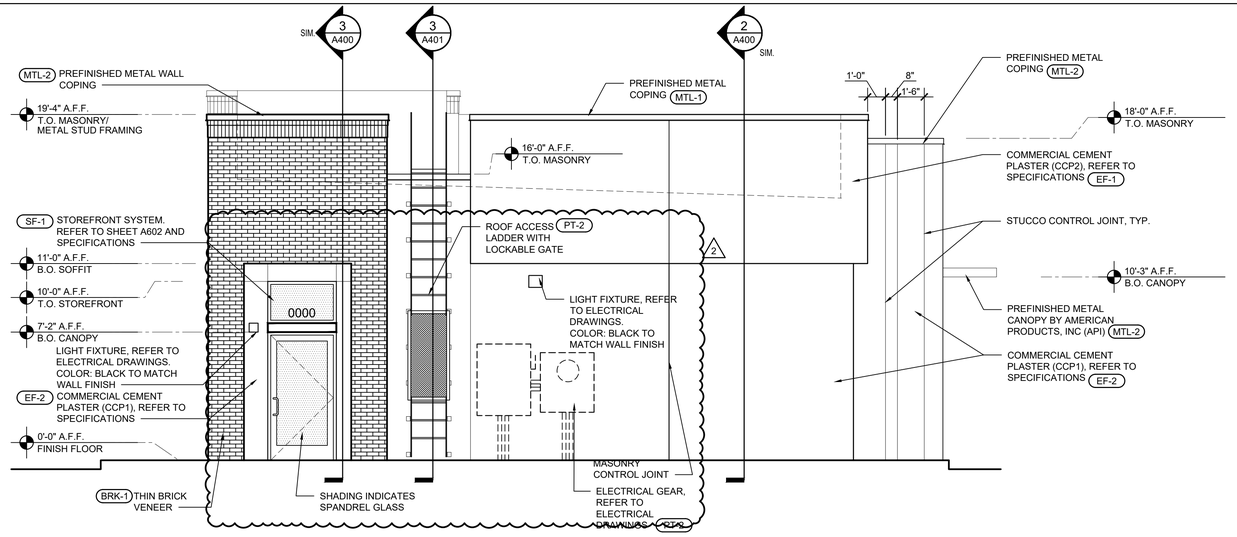

1 NORTH ELEVATION

SCALE: 1/4" = 1'-0"

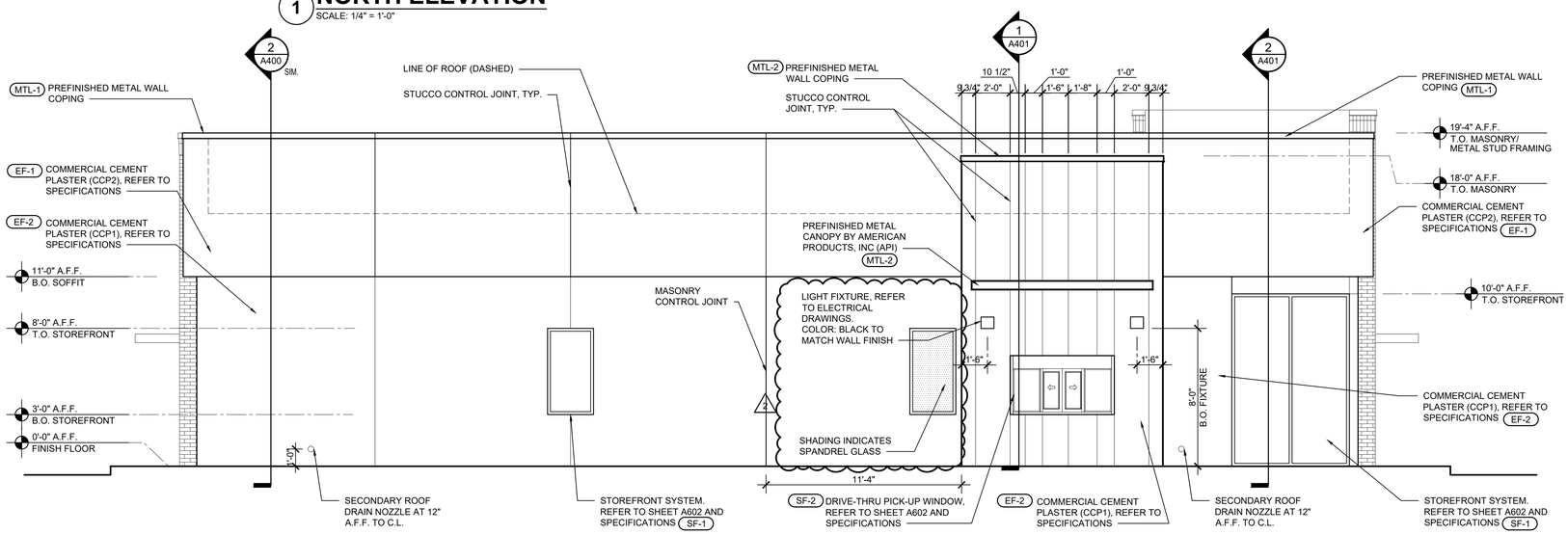

2 WEST ELEVATION

SCALE: 1/4" = 1'-0"

GENERAL NOTES

TO THE FULLEST EXTENT POSSIBLE, BUILDING COMPONENTS WILL BE MARKED AS 'TYPICAL' (TYP.). WHERE SO, KEYED NOTES WILL NOT BE DUPLICATED FOR COMPONENTS OF LIKE KIND. SHOULD THE CONTRACTOR REQUIRE CLARIFICATION OF ANY SUCH COMPONENT, A REQUEST FOR INFORMATION (RFI) SHALL BE SUBMITTED TO THE ARCHITECT PRIOR TO BID

SIGNAGE NOTES:

ANY BUILDING MOUNTED SIGNAGE DEPICTED IN THESE DOCUMENTS IS FOR COORDINATION PURPOSES ONLY AND IS NOT INTENDED FOR FABRICATION OR INSTALLATION BY THE GENERAL CONTRACTOR. IT SHALL BE UNDERSTOOD THAT ALL EXTERIOR BUILDING MOUNTED AND SITE SIGNAGE WILL BE PERMITTED SEPARATELY BY THE OWNER'S SIGN VENDOR. AT THAT TIME, COMPLETE DETAILS INCLUDING, BUT NOT LIMITED TO, SIGN FABRICATION, SIGN INSTALLATION, SIGN AREA AND QUANTITIES, ETC. SHALL BE SUBMITTED (BY THE SIGN VENDOR) FOR PERMIT AND APPROVAL PRIOR TO COMMENCEMENT OF WORK.
SEE ELECTRICAL DRAWINGS FOR POWER REQUIREMENTS

FACILITY ADDRESS REQUIREMENTS:
NEW AND EXISTING BUILDINGS SHALL HAVE APPROVED ADDRESS NUMBERS PLACED IN A POSITION TO BE PLAINLY LEGIBLE AND VISIBLE FROM THE STREET OR ROAD FRONTING THE PROPERTY

ADDRESS NUMBERS SHALL CONTRAST WITH THEIR BACKGROUND. NUMERALS SHALL BE AT LEAST 6 INCHES IN HEIGHT

WHERE ADDRESS IDENTIFICATION IS REQUIRED BY THE FIRE OFFICIAL ON OTHER ELEVATIONS OF BUILDINGS, SUCH NUMERALS SHALL NOT BE LESS THAN SIX INCHES IN HEIGHT

ADDRESS NUMBERS SHALL BE ARABIC NUMERALS OR ALPHABET LETTERS

CRITICAL NOTES

WALL FINISHES AT PARAPET RETURNS:
THE DESIGN INTENT FOR PARAPET WALLS THAT RETURN ONTO THE ROOF SURFACE IS THAT THEY, WHERE EXPOSED TO VIEW, ARE TO BE PROVIDED WITH WALL FINISHES THAT ARE CONSISTENT WITH THE ADJACENT BUILDING ELEVATIONS. FOR EXAMPLE, IF CEMENT PLASTER IS PROVIDED ALONG THE MAIN BUILDING ELEVATION, THE PARAPET RETURNS ARE TO BE PROVIDED WITH EQUAL FINISHES

THE SHELL GENERAL CONTRACTOR SHALL FULLY REVIEW AND COORDINATE WALL FINISHES WITH APPLICABLE TRADES PRIOR TO INSTALLATION. UNDER NO CIRCUMSTANCES WILL EXPOSED ROOF MEMBRANE BE ACCEPTED AS A WALL FINISH AT THE PARAPET RETURN CONDITIONS NOTED

WALL COUNTERFLASHING DETAILS:
REFER TO WALL SECTIONS AND ENLARGED DETAILS FOR THE SPECIFIED COUNTERFLASHING REQUIRED ABOVE CANOPIES, AWNINGS, PILASTER CAPS AND, WHERE APPLICABLE, TRIM MOULDING. IN SUCH CASES, THE DESIGN INTENT IS TO LIMIT THE VISIBILITY OF COUNTERFLASHINGS BY INCORPORATING LOW PROFILE OR CONCEALED FLASHINGS

THE SHELL GENERAL CONTRACTOR SHALL FULLY REVIEW AND COORDINATE ALL WALL COUNTERFLASHING REQUIREMENTS WITH THE ROOFER AND APPLICABLE TRADES PRIOR TO INSTALLATION. SHOULD CLARIFICATION OF ANY DETAIL BE NEEDED, THE SHELL GENERAL CONTRACTOR SHALL SUBMIT AN RFI TO THE ARCHITECT PRIOR TO INSTALLATION

UNDER NO CIRCUMSTANCES WILL EXPOSED SINGLE-PLY MEMBRANE BE AN ACCEPTABLE MEANS OF FLASHING AT THE CONDITIONS NOTED

EXTERIOR FINISH NOTES

EXTERIOR INSULATION FINISH SYSTEM (EIFS) REQUIREMENTS:

1. THE STANDARD FINISH COAT OVER CEMENT PLASTER SURFACES SHALL BE AN ACRYLIC EIFS FINISH COAT, "DRYVIT TAFTS" (OPTION 1) AS MANUFACTURED BY DRYVIT SYSTEMS, INC. COLORS, AS SPECIFIED ON THE EXTERIOR FINISH SCHEDULE, HAVE BEEN SELECTED FROM DRYVIT'S STANDARD COLORS. THIS SYSTEM CONSISTS OF A TINTED PRIMER AND TEXTURED ACRYLIC FINISH WITH INTEGRAL COLOR. THE SPECIFIED SYSTEM HAS A 10-YEAR MANUFACTURER WARRANTY

2. WHERE A CUSTOM COLOR IS REQUIRED FOR THE FINISH COAT OVER CEMENT PLASTER SURFACES, AN ACRYLIC EIFS FINISH COAT, "DRYVIT TAFTS" (OPTION 1) WITH STRATOTONE COLOR MATCHING SYSTEM AS MANUFACTURED BY DRYVIT SYSTEMS, INC. SHALL BE PROVIDED. CUSTOM COLORS ARE SPECIFIED ON THE EXTERIOR FINISH SCHEDULE. THIS SYSTEM CONSISTS OF A TINTED PRIMER AND TEXTURED ACRYLIC FINISH WITH INTEGRAL COLOR. THE SPECIFIED SYSTEM HAS A 5-YEAR MANUFACTURER WARRANTY

3. ALL FINISH COAT TEXTURES SHALL BE "SANDPEBBLE" UNLESS OTHERWISE NOTED

4. WHERE FOAM TRIM, CORNICE MOLDING OR OTHER SHAPES ARE SPECIFIED, COMPONENTS SHALL BE AS MANUFACTURED BY "DRYVIT SHAPES BY ACROCORE" AND SHALL BE COMPRISED OF A TYPE 1 CLASSIFICATION EXPANDED POLYSTYRENE WRAPPED IN A FLEXIBLE IMPACT RESISTANT FIBERGLASS MESH AND COATED WITH A FACTORY APPLIED POLYMER MODIFIED, FLEXIBLE CEMENT COATING

5. ALL GENERAL CONTRACTOR BIDS SHALL INCLUDE THE ABOVE STATED SYSTEMS / PRODUCTS IN THEIR BASE BIDS. SUBSTITUTIONS WILL BE CONSIDERED FOR APPROVAL BUT ONLY IF FULLY QUALIFIED IN BIDS INCLUDING COMPLETE SYSTEM / PRODUCT SPECIFICATIONS AND ASSOCIATED COSTS

ALUMINUM COPING AND DRIP EDGES:

1. ALL COMPONENTS SHALL BE PREFINISHED WITH A FACTORY APPLIED, KYNAR 500 FINISH OR MANUFACTURER EQUIVALENT.

ELECTRICAL GEAR, ROOF LADDER AND DOOR AND FRAME ON THE (REAR) FACADE:

1. ALL COMPONENTS SHALL BE PAINTED

GENERAL:

1. WHERE PLASTER REVEALS ARE NOT PREFINISHED, REVEALS SHALL BE PAINTED TO MATCH THE ADJACENT WALL COLOR UNLESS OTHERWISE NOTED

2. ALL EXPOSED, BUILDING MOUNTED UTILITIES AND CONDUITS SHALL BE PAINTED TO MATCH THE ADJACENT WALL SURFACES UNLESS OTHERWISE NOTED

THE CONTRACTOR SHALL REQUEST A COLORIZED COPY OF THE ELEVATIONS FROM THE ARCHITECT PRIOR TO ORDERING OR APPLYING EIFS, PAINT AND OTHER EXTERIOR FINISHES. THE COLORIZED ELEVATIONS WILL HELP CONFIRM COLORS AND ASSIST THE PAINTER WHERE COLOR CHANGES OCCUR

EXTERIOR FINISH SCHEDULE

CEMENT PLASTER / EIFS FINISHES - ACRYLIC DPR EIFS FINISH
WITH INTEGRAL COLOR AND TEXTURE. COLOR MATCH REFERENCED PAINTS

TAG	MANUFACTURER	SHERWIN WILLIAMS COLOR	DESCRIPTION
EF-1	DRYVIT	PPG "FOG"	CUSTOM DRYVIT COLOR
EF-2	DRYVIT	PPG "KNIGHT'S ARMOR"	CUSTOM DRYVIT COLOR
PAINT FINISHES			
PT-2	PPG	"KNIGHT'S ARMOR"	
METAL COPING, TRIM AND CANOPIES			
TAG	MANUFACTURER	COLOR	DESCRIPTION
MTL-1	TBD	MATCH EF-2 PPG "FOG"	
MTL-2	TBD	MATCH SF-1 "CHARCOAL	
ALUMINUM STOREFRONT / DRIVE-THRU PICK-UP WINDOW			
SF-1	KAWNEER	"CHARCOAL"	PERMAFLUOR COATING
SF-2	QUICKSERV	"BRONZE"	
BRICK			
BRK-1	TBD	DARK GRAY	THIN BRICK

12/3/2025 2:52 PM

FWH Architects
3336 Grand Blvd. Suite 201
Holiday, Florida 34690
Ph. 727. 815. 3336
FABER@FWHARCHITECTS.COM

brightwork real estate
3708 WEST SWANN AVE.
SUITE 200
TAMPA, FL 33609
PHONE: 813.874.1700

TO THE BEST OF THE KNOWLEDGE OF THE ARCHITECTS AND ENGINEERS, SAID PLANS AND SPECIFICATIONS COMPLY WITH THE APPLICABLE MINIMUM BUILDING CODES AND THE APPLICABLE MINIMUM FIRE SAFETY STANDARDS

GUY F. FABER
FL License No. AR0015323
seal

no.	date	revision descriptions
1	12.02.2025	REVISED PER COORDINATION W/ TENANT INTERIORS

CHIPOTLE MEXICAN GRILL
BUILDING SHELL
2000 NOLTE ROAD
ST. CLOUD, FLORIDA 34722

08.29.2025
date

25008
comm. no.

EXTERIOR ELEVATIONS

A301

TO THE FULLEST EXTENT POSSIBLE, BUILDING COMPONENTS WILL BE MARKED AS 'TYPICAL' (TYP.). WHERE SO, KEYED NOTES WILL NOT BE DUPLICATED FOR COMPONENTS OF LIKE KIND. SHOULD THE CONTRACTOR REQUIRE CLARIFICATION OF ANY SUCH COMPONENT, A REQUEST FOR INFORMATION (RFI) SHALL BE SUBMITTED TO THE ARCHITECT PRIOR TO BID

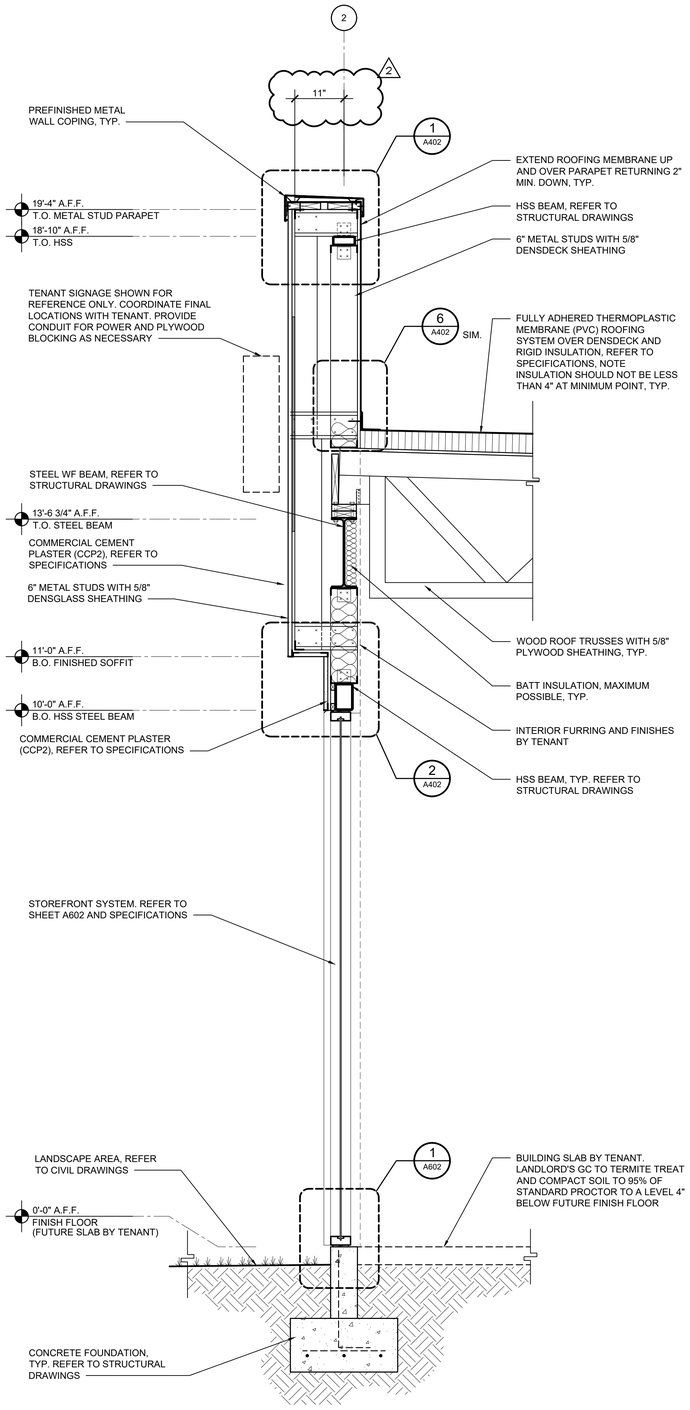

1 **WALL SECTION**
SCALE: 3/4" = 1'-0"

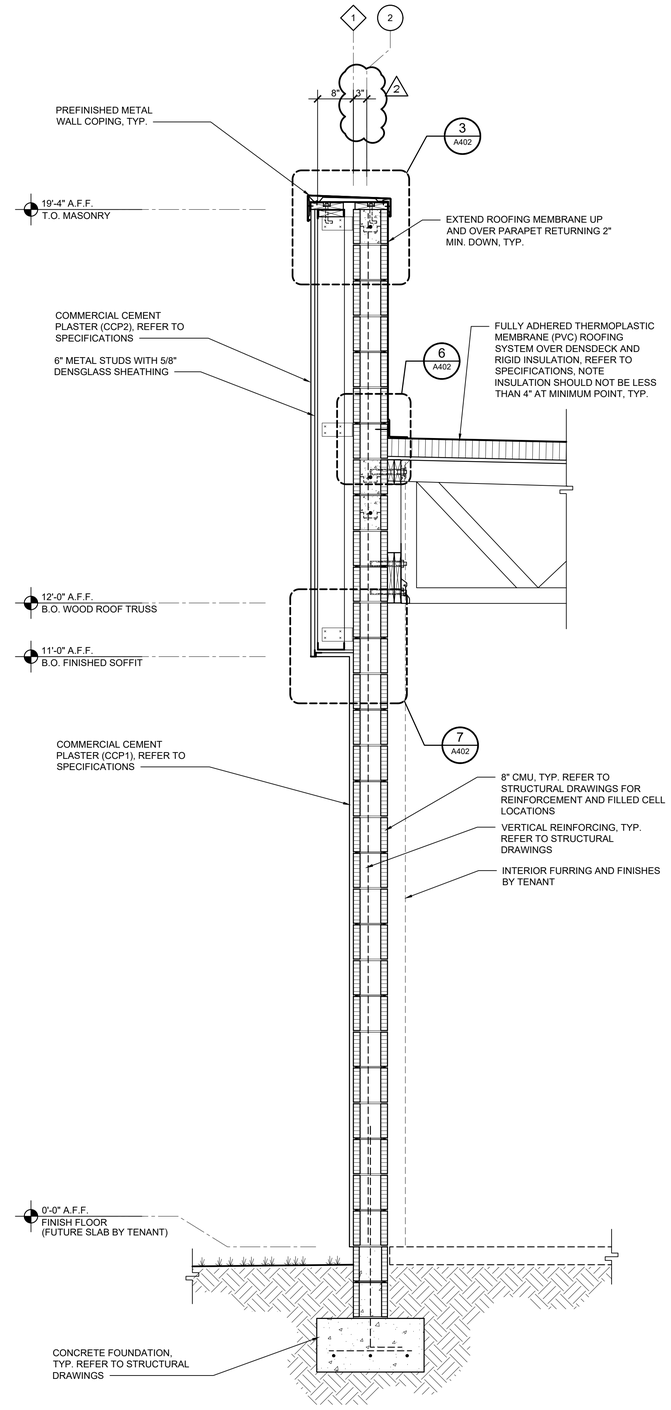

2 **WALL SECTION**
SCALE: 3/4" = 1'-0"

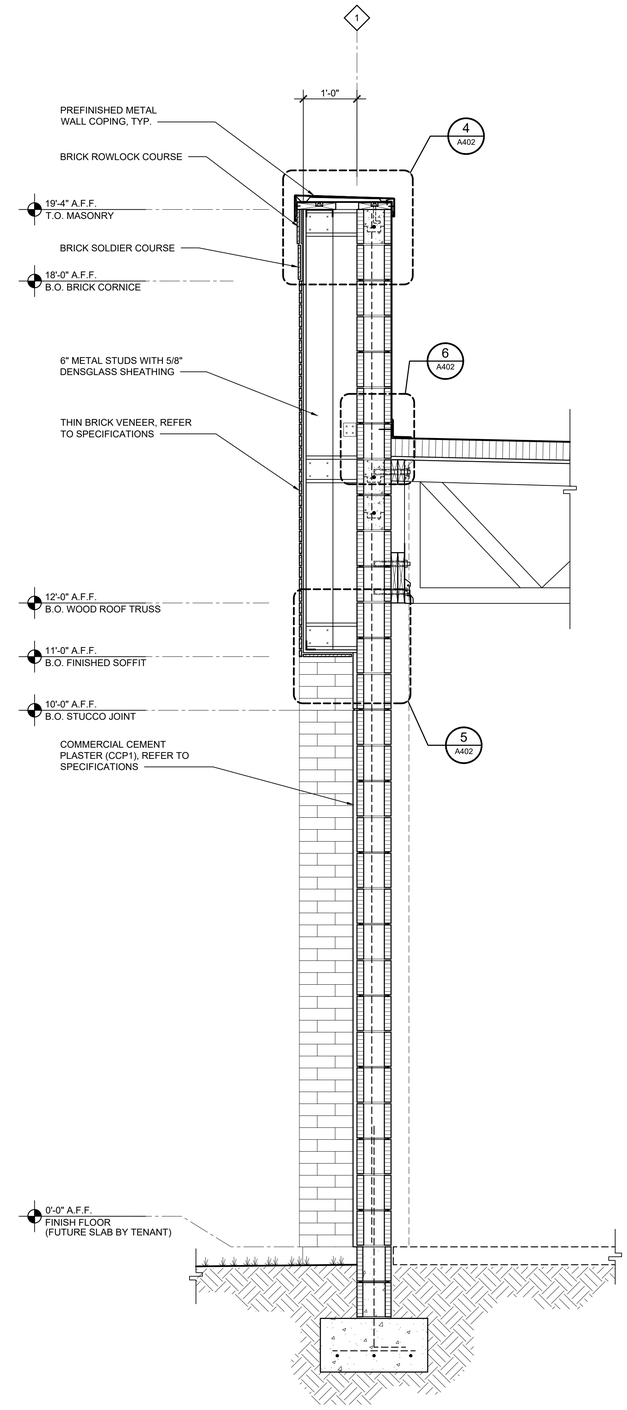

3 **WALL SECTION**
SCALE: 3/4" = 1'-0"

FWH Architects
3336 Grand Blvd. Suite 201
Holiday, Florida 34690
Ph. 727. 815. 3336
FABER@FWHARCHITECTS.COM

brightwork real estate
3708 WEST SWANN AVE.
SUITE 200
TAMPA, FL 33609
PHONE: 813.874.1700

TO THE BEST OF THE KNOWLEDGE OF THE ARCHITECT'S AND ENGINEERS, SAID PLANS AND SPECIFICATIONS COMPLY WITH THE APPLICABLE MINIMUM BUILDING CODES AND THE APPLICABLE MINIMUM FIRE SAFETY STANDARDS

GUY F. FABER
FL License No. AR0015323
seal

no.	date	revision descriptions
1	12.02.2025	REVISED PER COORDINATION W/ TENANT INTERIORS

CHIPOTLE MEXICAN GRILL
BUILDING SHELL

2000 NOLTE ROAD
ST. CLOUD, FLORIDA 34722

08.29.2025
date

25008
comm. no.

WALL SECTIONS

A400

12/3/2025 2:52 PM

TO THE FULLEST EXTENT POSSIBLE, BUILDING COMPONENTS WILL BE MARKED AS "TYPICAL" (TYP.). WHERE SO, KEYED NOTES WILL NOT BE DUPLICATED FOR COMPONENTS OF LIKE KIND. SHOULD THE CONTRACTOR REQUIRE CLARIFICATION OF ANY SUCH COMPONENT, A REQUEST FOR INFORMATION (RFI) SHALL BE SUBMITTED TO THE ARCHITECT PRIOR TO BID

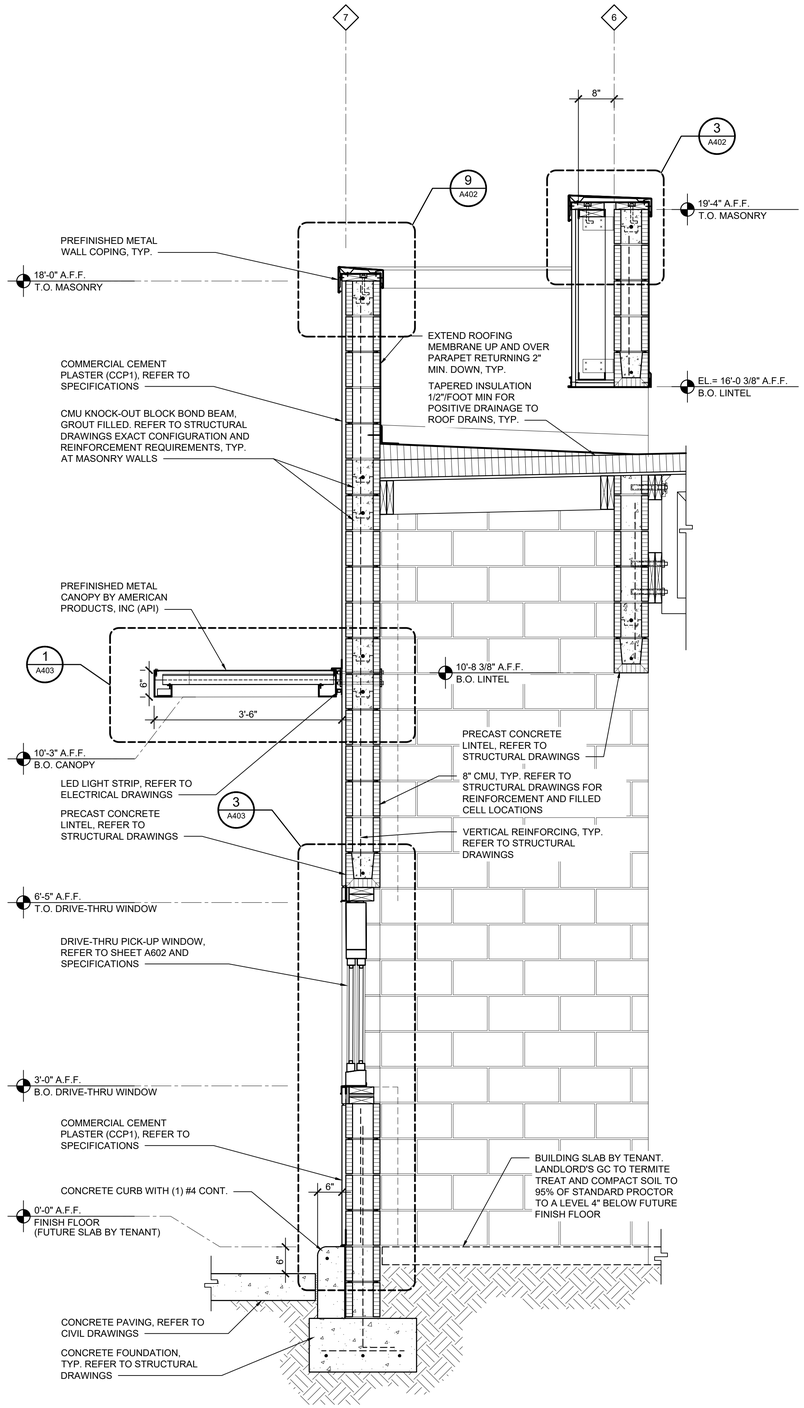

1 WALL SECTION
SCALE: 3/4" = 1'-0"

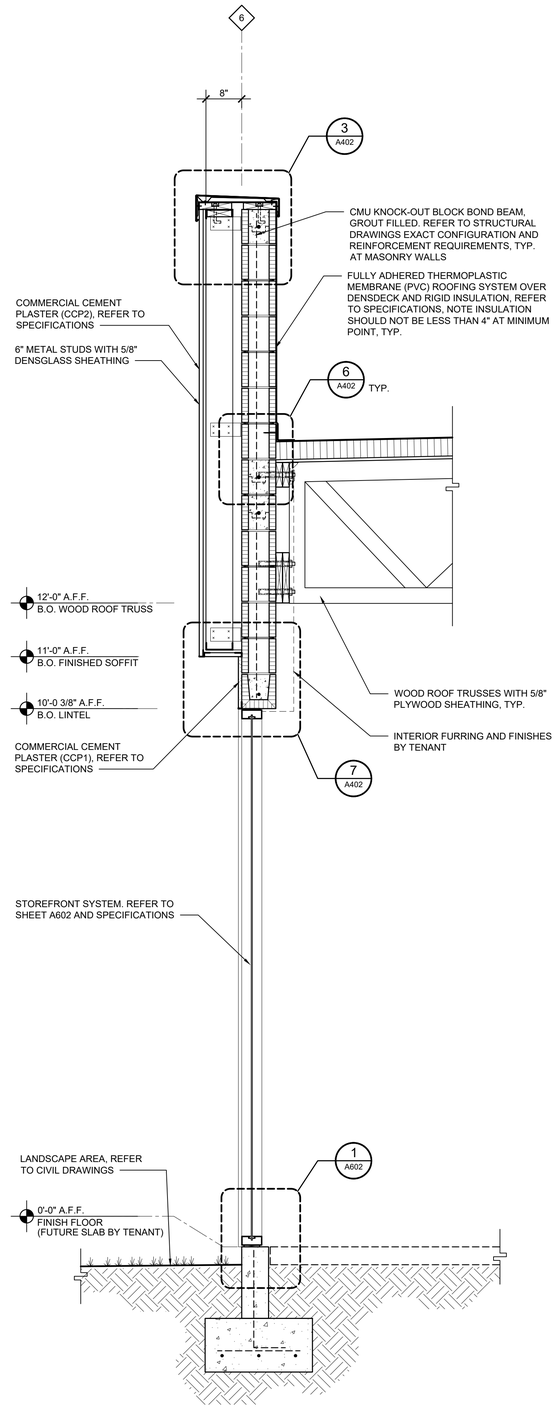

2 WALL SECTION
SCALE: 3/4" = 1'-0"

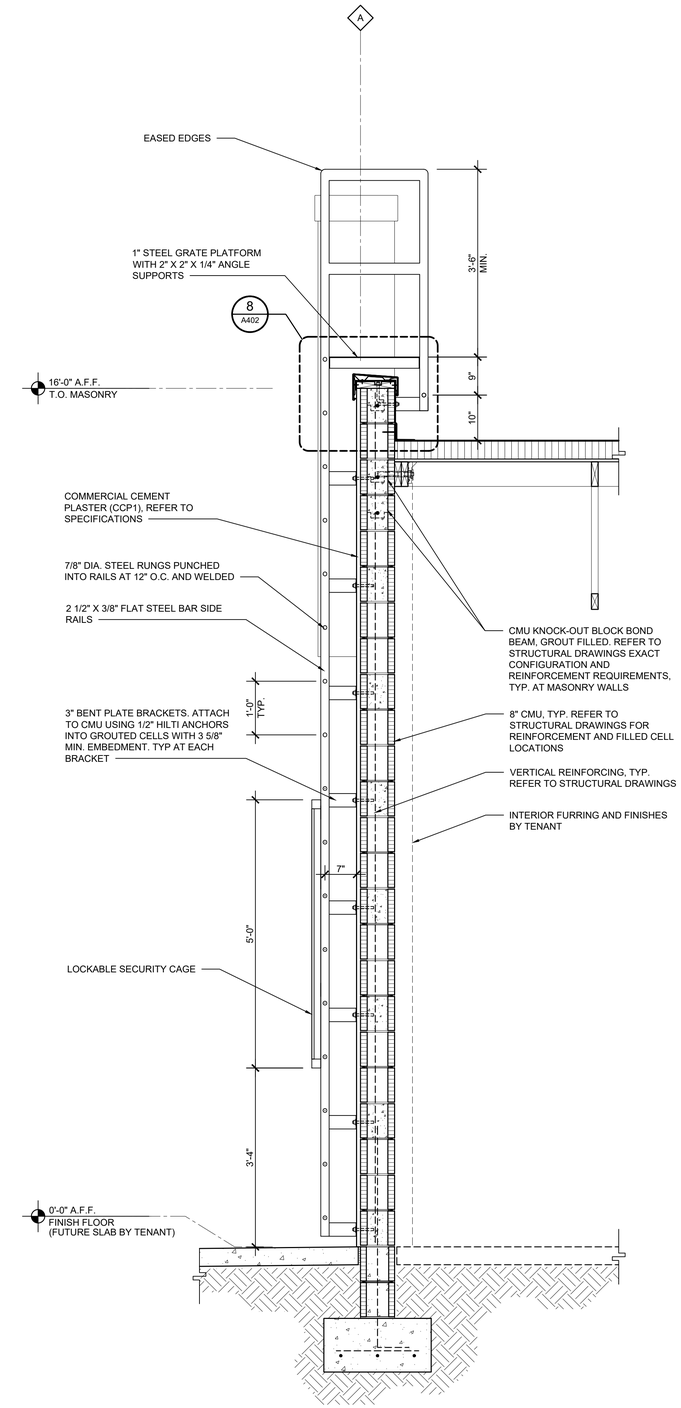

3 WALL SECTION
SCALE: 3/4" = 1'-0"

FWH Architects
3336 Grand Blvd. Suite 201
Holiday, Florida 34690
Ph. 727. 815. 3336
FABER@FWHARCHITECTS.COM

brightwork real estate
3708 WEST SWANN AVE.
SUITE 200
TAMPA, FL 33609
PHONE: 813.874.1700

TO THE BEST OF THE KNOWLEDGE OF THE ARCHITECT'S AND ENGINEERS, SAID PLANS AND SPECIFICATIONS COMPLY WITH THE APPLICABLE MINIMUM BUILDING CODES AND THE APPLICABLE MINIMUM FIRE SAFETY STANDARDS

GUY F. FABER
FL License No. AR0015323
seal

no.	date	revision descriptions
1		
2		

CHIPOTLE MEXICAN GRILL
BUILDING SHELL

2000 NOLTE ROAD
ST. CLOUD, FLORIDA 34722

08.29.2025
date

25008
comm. no.

WALL SECTIONS

A401

12/3/2025 2:53 PM

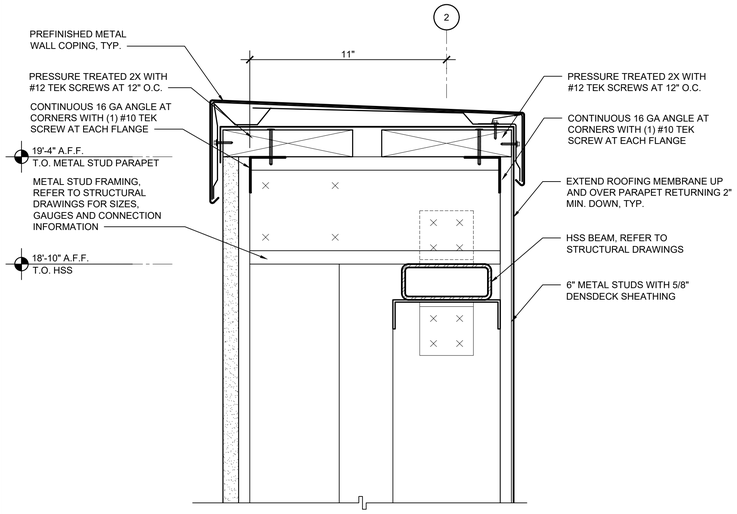

1 SECTION DETAIL
SCALE: 3" = 1'-0"

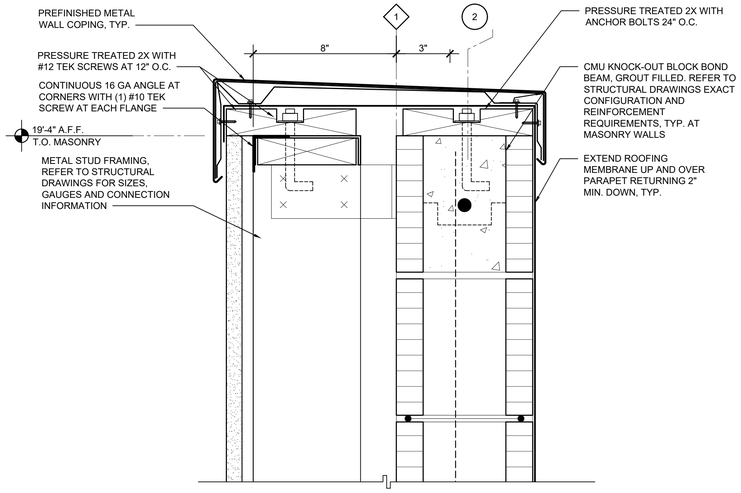

3 SECTION DETAIL
SCALE: 3" = 1'-0"

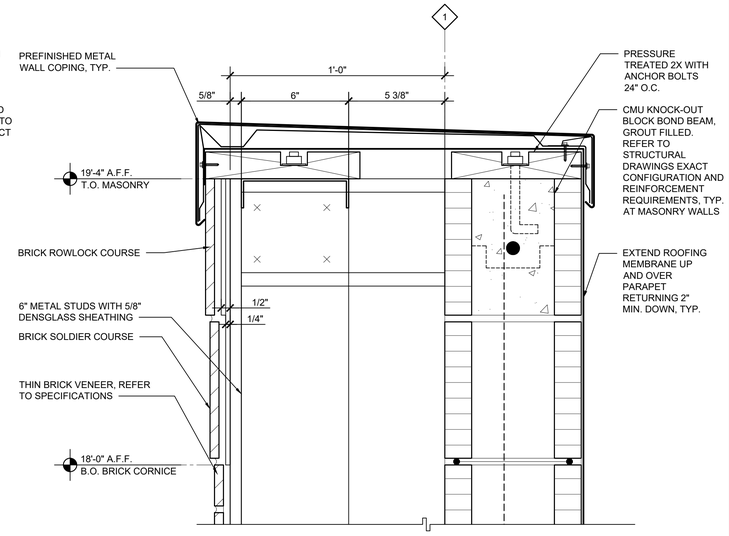

4 SECTION DETAIL
SCALE: 3" = 1'-0"

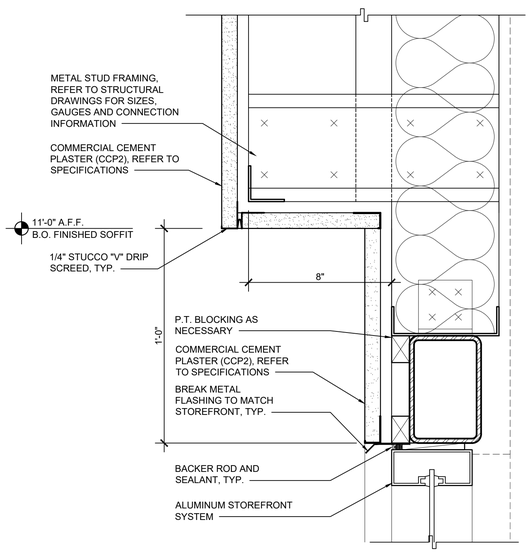

2 SECTION DETAIL
SCALE: 3" = 1'-0"

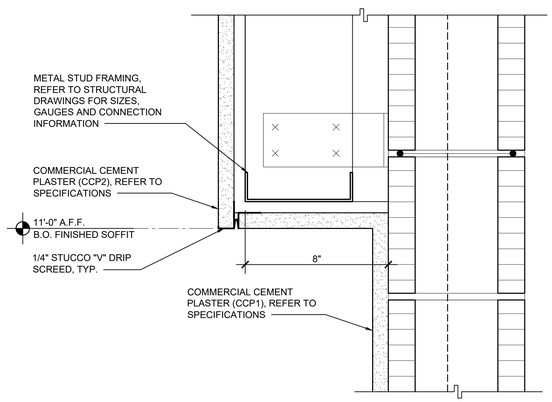

7 SECTION DETAIL
SCALE: 3" = 1'-0"

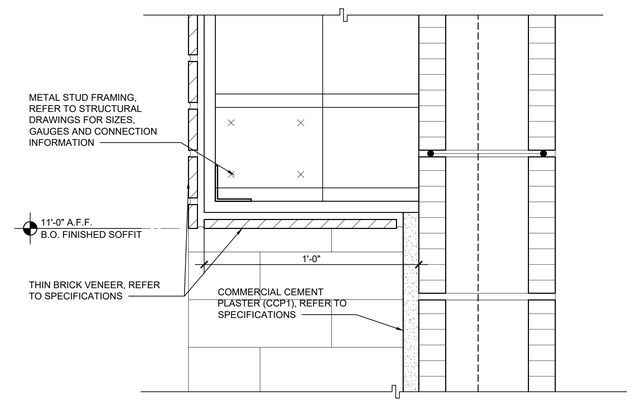

5 SECTION DETAIL
SCALE: 3" = 1'-0"

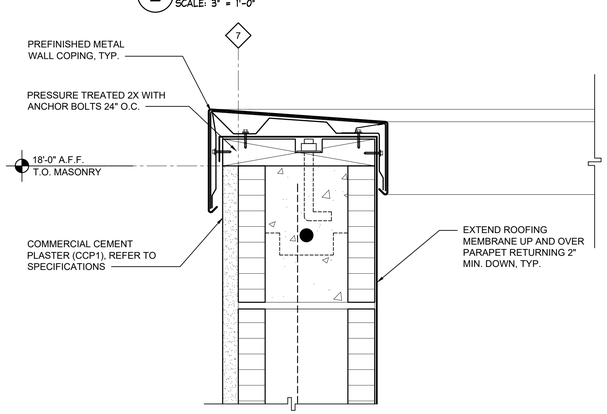

9 SECTION DETAIL
SCALE: 3" = 1'-0"

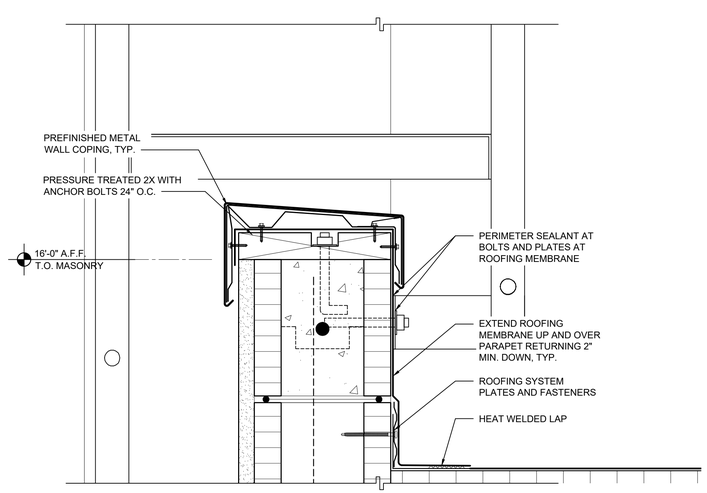

8 SECTION DETAIL
SCALE: 3" = 1'-0"

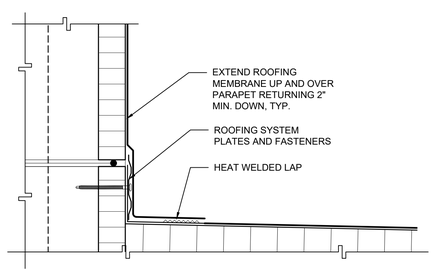

6 SECTION DETAIL
SCALE: 3" = 1'-0"

TO THE FULLEST EXTENT POSSIBLE, BUILDING COMPONENTS WILL BE MARKED AS 'TYPICAL' (TYP.). WHERE SO, KEYED NOTES WILL NOT BE DUPLICATED FOR COMPONENTS OF LIKE KIND. SHOULD THE CONTRACTOR REQUIRE CLARIFICATION OF ANY SUCH COMPONENT, A REQUEST FOR INFORMATION (RFI) SHALL BE SUBMITTED TO THE ARCHITECT PRIOR TO BID

FWH Architects
3336 Grand Blvd. Suite 201
Holiday, Florida 34690
Ph. 727. 815. 3336
FABER@FWHARCHITECTS.COM

brightwork real estate
3708 WEST SWANN AVE.
SUITE 200
TAMPA, FL 33609
PHONE: 813.874.1700

TO THE BEST OF THE KNOWLEDGE OF THE ARCHITECTS AND ENGINEERS, SAID PLANS AND SPECIFICATIONS COMPLY WITH THE APPLICABLE MINIMUM BUILDING CODES AND THE APPLICABLE MINIMUM FIRE SAFETY STANDARDS

GUY F. FABER
FL License No. AR0015323
seal

no.	date	revision descriptions
1		
2		

CHIPOTLE MEXICAN GRILL
BUILDING SHELL

2000 NOLTE ROAD
ST. CLOUD, FLORIDA 34722

08.29.2025
date

25008
comm. no.

SECTION DETAILS

A402

12/3/2025 2:54 PM

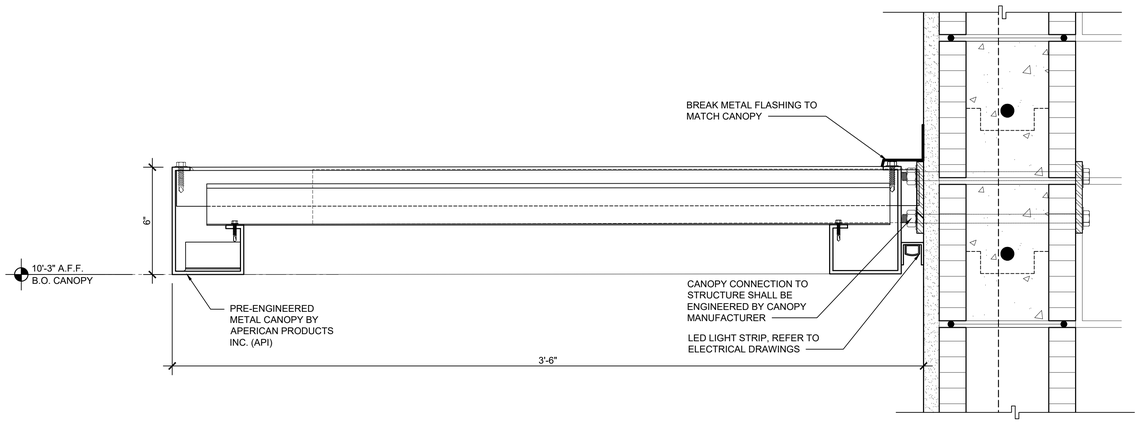

1 SECTION DETAIL
SCALE: 3" = 1'-0"

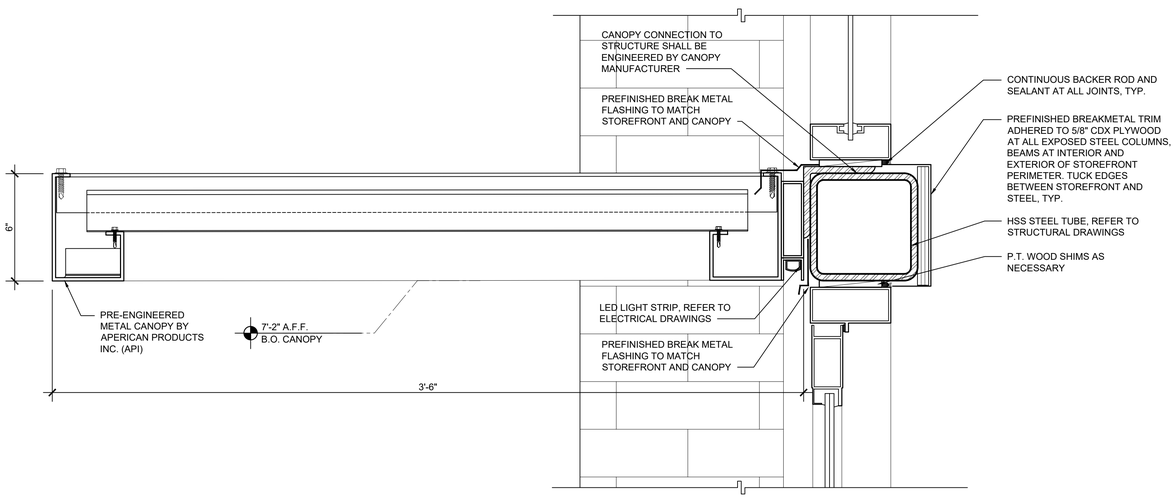

2 SECTION DETAIL
SCALE: 3" = 1'-0"

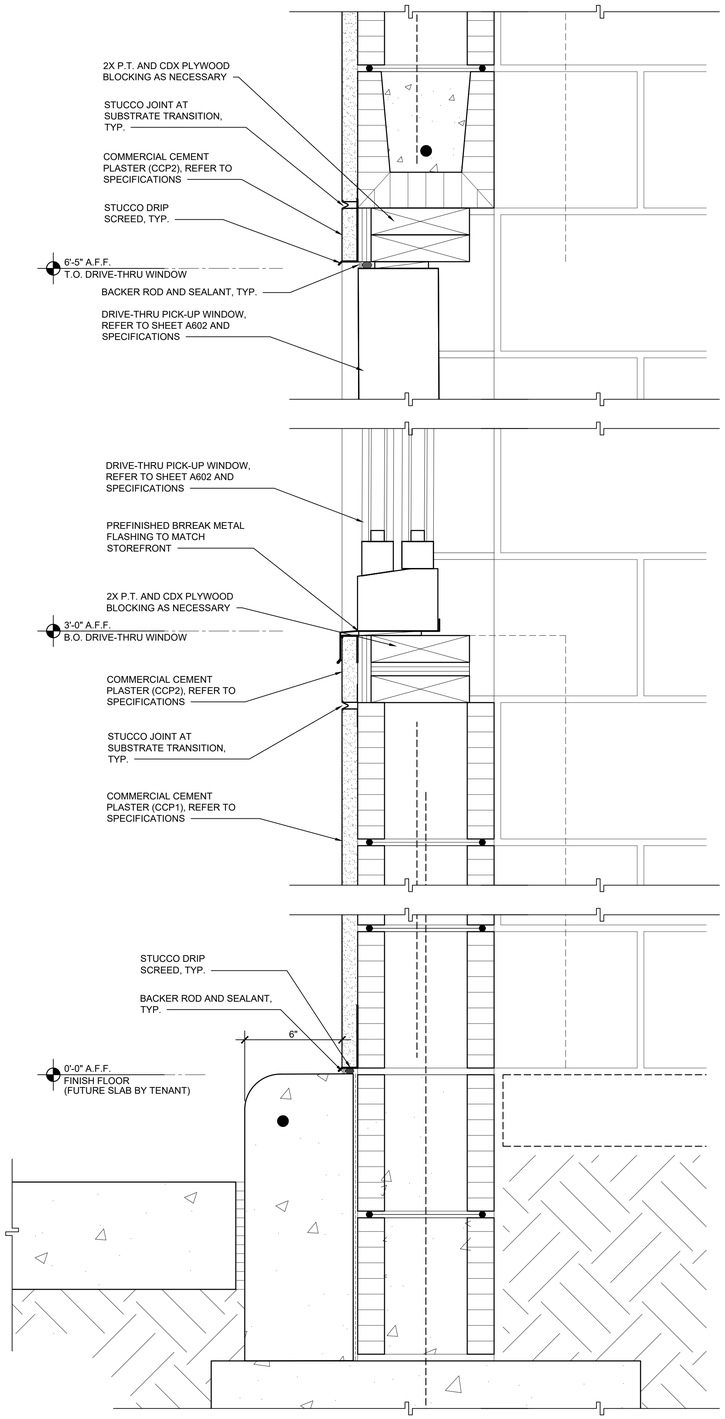

3 SECTION DETAIL
SCALE: 3" = 1'-0"

TO THE FULLEST EXTENT POSSIBLE, BUILDING COMPONENTS WILL BE MARKED AS 'TYPICAL' (TYP.). WHERE SO, KEYED NOTES WILL NOT BE DUPLICATED FOR COMPONENTS OF LIKE KIND. SHOULD THE CONTRACTOR REQUIRE CLARIFICATION OF ANY SUCH COMPONENT, A REQUEST FOR INFORMATION (RFI) SHALL BE SUBMITTED TO THE ARCHITECT PRIOR TO BID

FWH Architects
3336 Grand Blvd. Suite 201
Holiday, Florida 34690
Ph. 727. 815. 3336
FABER@FWHARCHITECTS.COM

brightwork real estate
3708 WEST SWANN AVE.
SUITE 200
TAMPA, FL 33609
PHONE: 813.874.1700

TO THE BEST OF THE KNOWLEDGE OF THE ARCHITECTS AND ENGINEERS, SAID PLANS AND SPECIFICATIONS COMPLY WITH THE APPLICABLE MINIMUM BUILDING CODES AND THE APPLICABLE MINIMUM FIRE SAFETY STANDARDS

GUY F. FABER
FL License No. AR0015323
seal

no.	date	revision descriptions
1		
2		

CHIPOTLE MEXICAN GRILL
BUILDING SHELL

2000 NOLTE ROAD
ST. CLOUD, FLORIDA 34722

08.29.2025
date

25008
comm. no.

SECTION DETAILS

A403

12/3/2025 2:54 PM

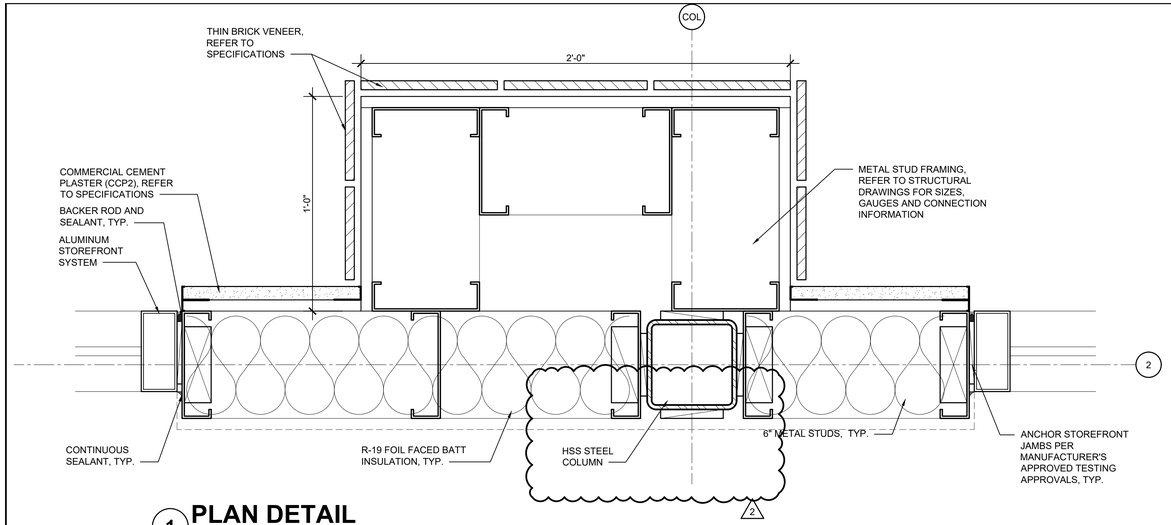

1 PLAN DETAIL
SCALE: 3" = 1'-0"

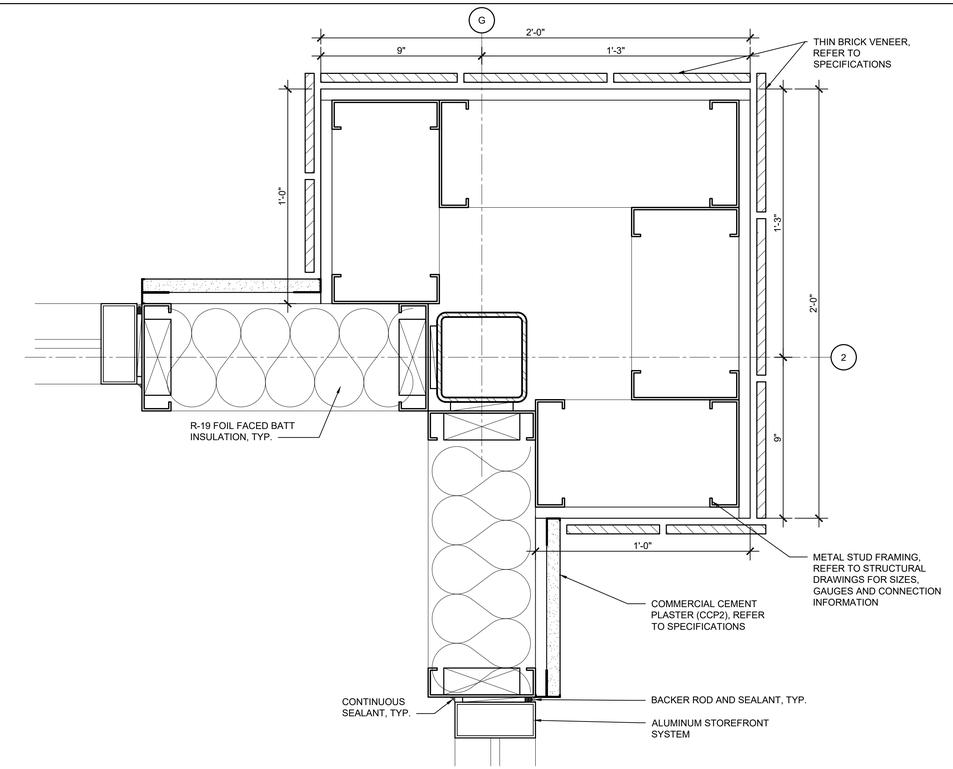

2 PLAN DETAIL
SCALE: 3" = 1'-0"

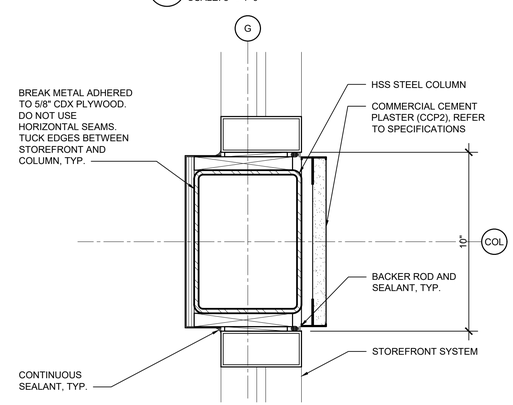

3 PLAN DETAIL
SCALE: 3" = 1'-0"

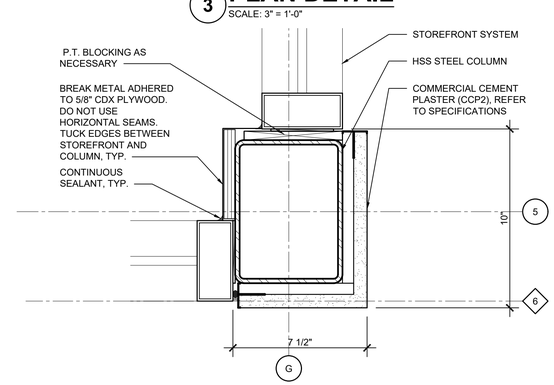

4 PLAN DETAIL
SCALE: 3" = 1'-0"

TO THE FULLEST EXTENT POSSIBLE, BUILDING COMPONENTS WILL BE MARKED AS 'TYPICAL' (TYP.). WHERE SO, KEYED NOTES WILL NOT BE DUPLICATED FOR COMPONENTS OF LIKE KIND. SHOULD THE CONTRACTOR REQUIRE CLARIFICATION OF ANY SUCH COMPONENT, A REQUEST FOR INFORMATION (RFI) SHALL BE SUBMITTED TO THE ARCHITECT PRIOR TO BID

NOTE:
ALL BREAK METAL AND FASTENERS TO BE POWDER COATED TO MATCH STOREFRONT FINISH

SEAL ALL JOINTS WITH BLACK SEALANT

FWH Architects
3336 Grand Blvd. Suite 201
Holiday, Florida 34690
Ph. 727. 815. 3336
FABER@FWHARCHITECTS.COM

brightwork real estate
3708 WEST SWANN AVE.
SUITE 200
TAMPA, FL 33609
PHONE: 813.874.1700

TO THE BEST OF THE KNOWLEDGE OF THE ARCHITECT'S AND ENGINEERS, SAID PLANS AND SPECIFICATIONS COMPLY WITH THE APPLICABLE MINIMUM BUILDING CODES AND THE APPLICABLE MINIMUM FIRE SAFETY STANDARDS

GUY F. FABER
FL License No. AR0015323
seal

no.	date	revision descriptions
1	12.02.2025	REVISED PER COORDINATION W/ TENANT INTERIORS

CHIPOTLE MEXICAN GRILL
BUILDING SHELL

2000 NOLTE ROAD
ST. CLOUD, FLORIDA 34722

08.29.2025
date

25008
comm. no.

PLAN DETAILS

A404

12/3/2025 2:54 PM

TO THE FULLEST EXTENT POSSIBLE, BUILDING COMPONENTS WILL BE MARKED AS 'TYPICAL' (TYP.). WHERE SO, KEYED NOTES WILL NOT BE DUPLICATED FOR COMPONENTS OF LIKE KIND. SHOULD THE CONTRACTOR REQUIRE CLARIFICATION OF ANY SUCH COMPONENT, A REQUEST FOR INFORMATION (RFI) SHALL BE SUBMITTED TO THE ARCHITECT PRIOR TO BID

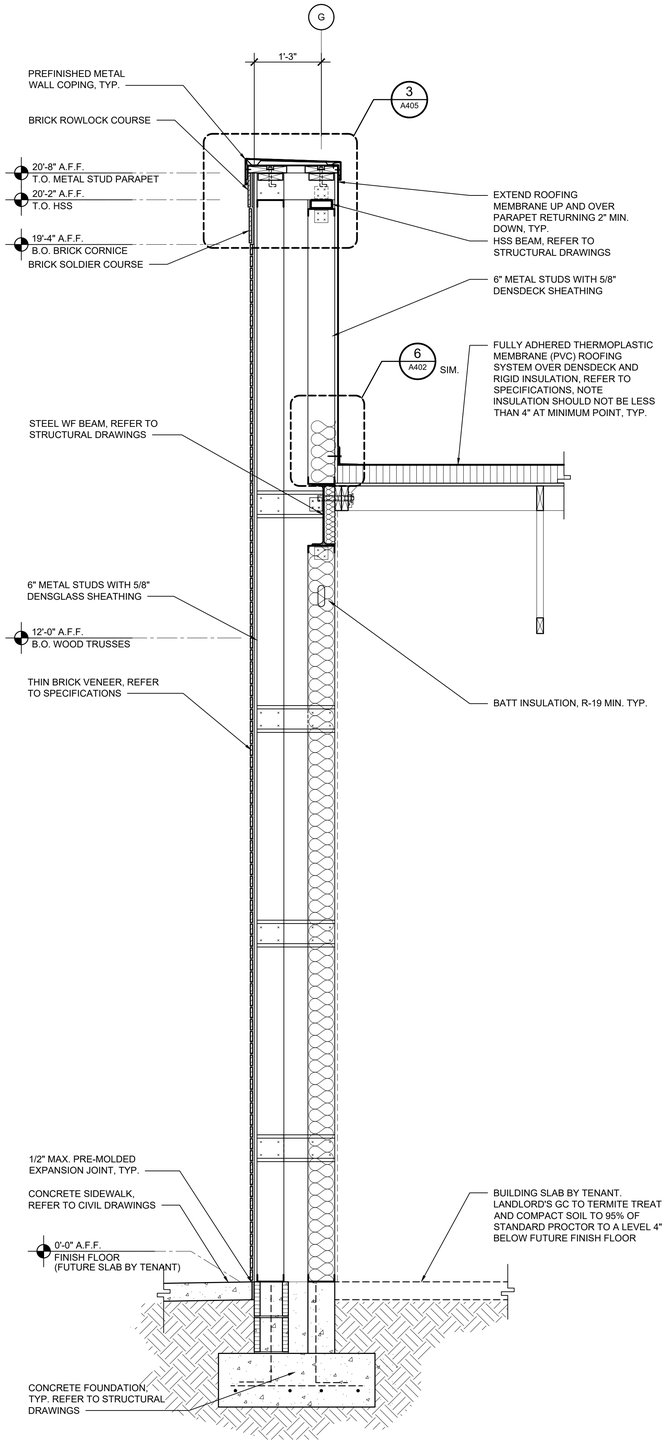

1 WALL SECTION
SCALE: 3/4" = 1'-0"

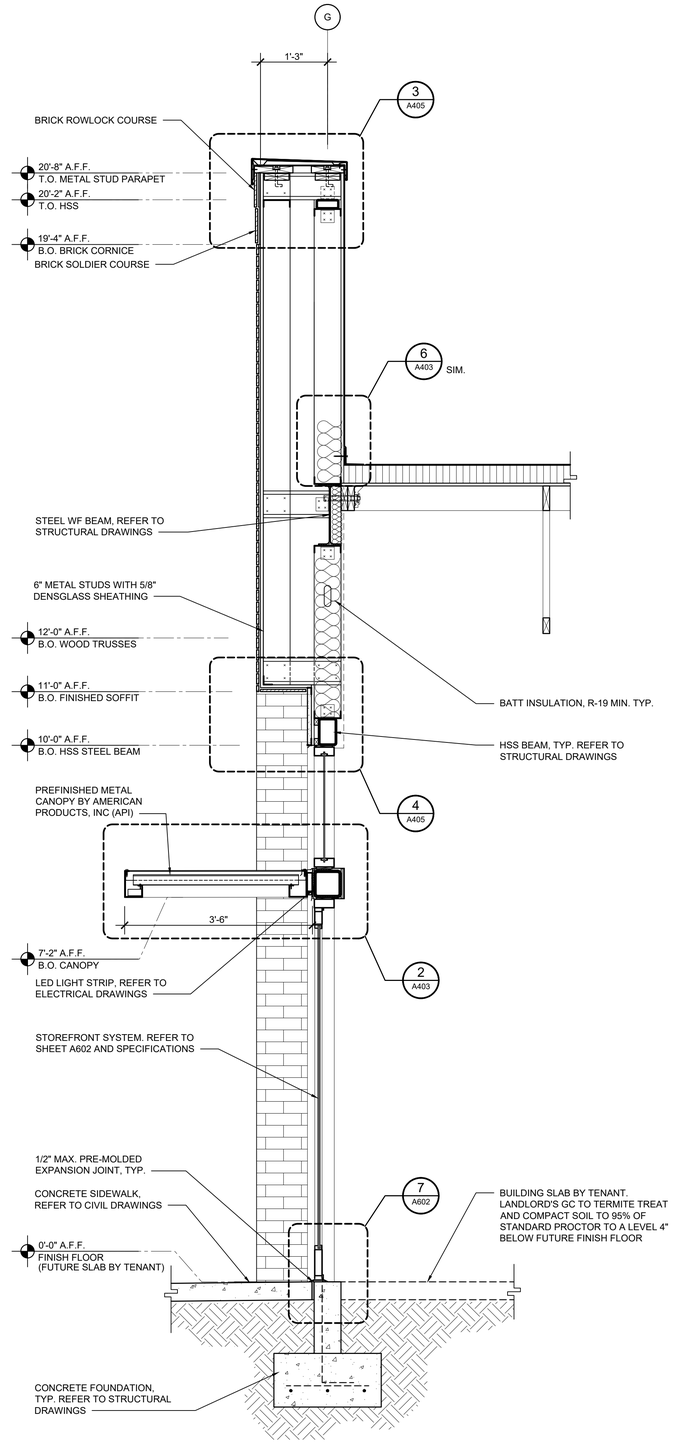

2 WALL SECTION
SCALE: 3/4" = 1'-0"

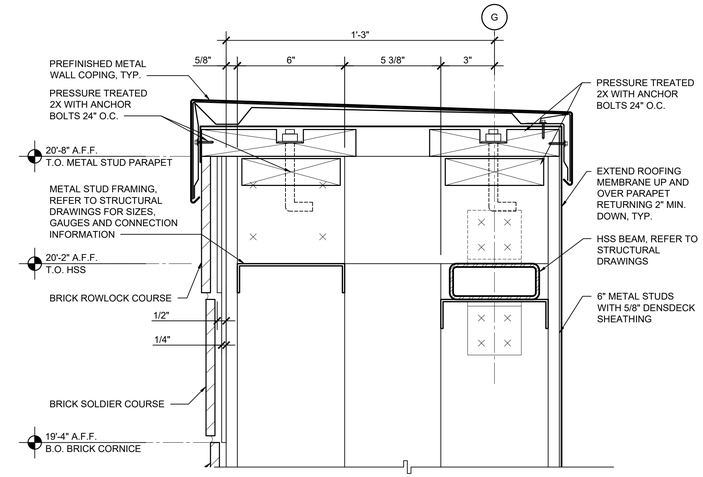

3 SECTION DETAIL
SCALE: 3" = 1'-0"

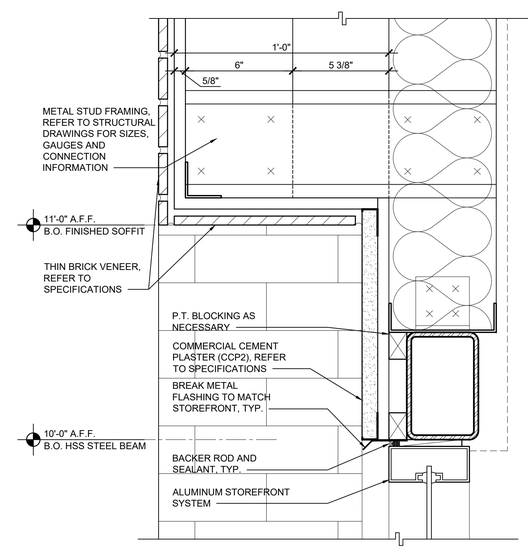

4 SECTION DETAIL
SCALE: 3" = 1'-0"

FWH Architects
3336 Grand Blvd. Suite 201
Holiday, Florida 34690
Ph. 727. 815. 3336
FABER@FWHARCHITECTS.COM

brightwork real estate
3708 WEST SWANN AVE.
SUITE 200
TAMPA, FL 33609
PHONE: 813.874.1700

TO THE BEST OF THE KNOWLEDGE OF THE ARCHITECT'S AND ENGINEERS, SAID PLANS AND SPECIFICATIONS COMPLY WITH THE APPLICABLE MINIMUM BUILDING CODES AND THE APPLICABLE MINIMUM FIRE SAFETY STANDARDS

GUY F. FABER
FL License No. AR0015323
seal

no.	date	revision descriptions
1		
2		

CHIPOTLE MEXICAN GRILL
BUILDING SHELL
2000 NOLTE ROAD
ST. CLOUD, FLORIDA 34722

08.29.2025
date

25008
comm. no.

WALL SECTIONS AND DETAILS

A405

12/3/2025 2:53 PM

DOOR SCHEDULE

TAG	ROOM	DOOR DESCRIPTION	DOOR WIDTH	DOOR HEIGHT	DOOR THICKNESS	DOOR TYPE	DOOR FINISH	FRAME FRAME TYPE	FRAME MATERIAL	FRAME STILE	HARDWARE SET	FIRE RATING	REMARKS
01	ENTRY	DOUBLE STOREFRONT (WIDE STILE, OFFSET PULL, PANIC)	PR 3' - 0"	7' - 0"	0' - 1 3/4"	A	SEE A300 & A301	STOREFRONT	ALUM	WIDE (5")	1		1,4,5
02	DINING	SINGLE STOREFRONT (WIDE STILE, OFFSET PULL, PANIC)	3' - 0"	7' - 0"	0' - 1 3/4"	A	SEE A300 & A301	STOREFRONT	ALUM	WIDE (5")	2A		1,4,5
03	KITCHEN	SINGLE STOREFRONT (WIDE STILE, OFFSET PULL, PANIC)	3' - 6"	7' - 0"	0' - 1 3/4"	A	SEE A300 & A301	STOREFRONT	ALUM	WIDE (5")	2A		1,4,5

REMARK NOTES

1. DOORS WITH REMARK #1 TO BE KEYED THE SAME
2. NOT USED
3. NOT USED
4. USE NON-SHRINK STRUCTURAL GROUT BED UNDER THRESHOLD
5. BLACK DOOR SWEEP TO BE USED WITH CHARCOAL, BLACK OR BRONZE STOREFRONT.
   LIGHT GRAY DOOR SWEEP TO BE USED WITH CLEAR ANODIZED ALUMINUM STOREFRONT

HARDWARE SETS

SET 1 - MAIN ENTRY - PAIR - OFFSET PULL - PANIC HARDWARE		
(2)	HINGE	KAWNEER CONTINUOUS HINGE, 84" #29 BLACK
(1)	MORTISE CYLINDER	SCHLAGE, MODEL 80-103, BRUSHED CHROME; C.O. CYLINDER AT 34" MIN. FROM BOTTOM OF DOOR
(1)	TEMP CORE	SCHLAGE, MODEL 80-035 INTERCHANGEABLE CORE, (BRUSHED CHROME)
(2)	PUSH HARDWARE	KAWNEER 1686 PANIC DEVICE, (628 ALUMINUM FINISH, 36" DOOR) W/ CYLINDER DOGGING; C.O. EXIT DEVICE AT 38" FROM BOTTOM OF DOOR
(2)	PULL HARDWARE	KAWNEER CO-9 OFFSET PULL #45 STAINESS STEEL
(2)	CLOSER	DORMA, MODEL 8916-AF89P (TOP JAMB), (ALUMINUM)
(2)	DOOR STOP	IVES, MODEL FS18S (ALUMINUM)
(2)	OVERHEAD STOP	GLYNN-JOHNSON, MODEL 454S-SP28 (ALUMINUM)
(2)	CLOSER BACK PLATE	DORMA, MODEL BP89, ALUMINUM
(1)	THRESHOLD	REESE, MODEL S239A-72 (SIZE 72")
(2)	SMOKE SEAL	REESE, MODEL F-797B-21
(2)	DOOR SWEEP	PEMKO, MODEL SFSC-200-36 (36" DOOR), TENANT FURNISHED

SET 2A - ENTRY - SINGLE - OFFSET PULL - PANIC HARDWARE		
(1)	HINGE	KAWNEER CONTINUOUS HINGE, 84" #29 BLACK
(1)	MORTISE CYLINDER	SCHLAGE, MODEL 80-103, BRUSHED CHROME; C.O. CYLINDER AT 34" MIN. FROM BOTTOM OF DOOR
(1)	TEMP CORE	SCHLAGE, MODEL 80-035 INTERCHANGEABLE CORE, (BRUSHED CHROME)
(1)	PUSH HARDWARE	KAWNEER 1686 PANIC DEVICE, (628 ALUMINUM FINISH, 36" DOOR) W/ CYLINDER DOGGING; C.O. EXIT DEVICE AT 38" FROM BOTTOM OF DOOR
(1)	PULL HARDWARE	KAWNEER CO-9 OFFSET PULL #45 STAINESS STEEL
(1)	CLOSER	DORMA, MODEL 8916-AF89P-689 (TOP JAMB), (ALUMINUM)
(1)	CLOSER BACK PLATE	DORMA, MODEL BP89, ALUMINUM
(1)	OVERHEAD STOP	GLYNN-JOHNSON, MODEL 454S-US32D (ALUMINUM)
(1)	THRESHOLD	REESE, MODEL S424A-36 (SIZE 36")
(1)	SMOKE SEAL	REESE, MODEL 797B-21
(1)	DOOR SWEEP	PEMKO, MODEL SFSC-200-36 (36" DOOR), TENANT FURNISHED
(1)	DOOR STOP	IVES, MODEL FS18S (ALUMINUM)

DOOR CLOSER

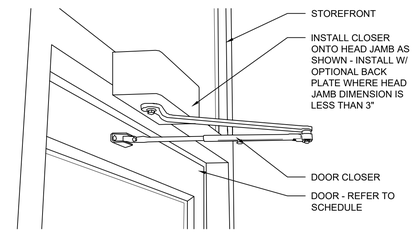

TOP JAMB MOUNT INSTALLATION. (NOTE THAT BACKPLATE IS MISSING IN THIS INSTALLATION BECAUSE HEAD JAMB IS OF ADEQUATE HEIGHT TO RECEIVE ALL MOUNTING SCREWS WITHOUT IT.) WHEN IN DOUBT ABOUT THE HEAD JAMB DIMENSION OR STABILITY, ORDER THE BACKPLATE.

DOOR FRAME TYPES

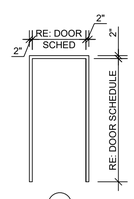

1

NOTE: GC TO VERIFY THE WALL THICKNESS PRIOR TO ORDERING DOOR FRAMES.

DOOR TYPES

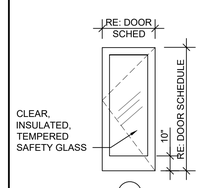

A

ALUMINUM DOOR W/ TEMPERED GLAZING

DOOR NOTES

1. ALL EGRESS DOORS SHALL BE READILY OPENABLE FROM THE EGRESS SIDE WITHOUT THE USE OF A KEY OR SPECIAL KNOWLEDGE OR EFFORT.
2. LATCHES, HANDLES, PANIC BARS AND ALL DOOR HARDWARE WILL COMPLY WITH SECTION 7.2 OF NFPA 101 PER THE SPECIFICATIONS.
3. THE MANAGER HAS A KEY TO UNLOCK RESTROOM DOORS, FROM THE OUTSIDE IN CASE OF AN EMERGENCY.
4. ALL DOORS TO REMAIN UNLOCKED DURING BUSINESS HOURS.
5. NOT USED
6. MAXIMUM EFFORT TO OPERATE EXTERIOR OR INTERIOR DOORS WITH CLOSERS SHALL NOT EXCEED 8.5 POUNDS. THIS MAY BE INCREASED TO 15 POUNDS FOR FIRE-RATED DOORS.
7. ALL FRAMES, DOORS AND HARDWARE TO BE FURNISHED BY LANDLORD'S CONTRACTOR.
8. THE BOTTOM 10 INCHES OF ALL DOORS SHALL HAVE A SMOOTH, UNINTERRUPTED SURFACE TO ALLOW THE DOOR TO BE OPENED BY A WHEELCHAIR FOOTREST WITHOUT CREATING A TRAP OR HAZARDOUS CONDITION.
9. NOT USED
10. NOT USED
11. ALL HARDWARE SHALL MATCH STOREFRONT, VERIFY WITH ARCHITECT PRIOR TO ORDERING

FWH Architects
3336 Grand Blvd. Suite 201
Holiday, Florida 34690
Ph. 727. 815. 3336
FABER@FWHARCHITECTS.COM

brightwork real estate
3708 WEST SWANN AVE.
SUITE 200
TAMPA, FL 33609
PHONE: 813.874.1700

TO THE BEST OF THE KNOWLEDGE OF THE ARCHITECT'S AND ENGINEERS, SAID PLANS AND SPECIFICATIONS COMPLY WITH THE APPLICABLE MINIMUM BUILDING CODES AND THE APPLICABLE MINIMUM FIRE SAFETY STANDARDS

GUY F. FABER
FL License No. AR0015323
seal

no.	date	revision descriptions
1		
2		

CHIPOTLE MEXICAN GRILL
BUILDING SHELL

2000 NOLTE ROAD
ST. CLOUD, FLORIDA 34722

08.29.2025
date

25008
comm. no.

DOOR AND HARDWARE SCHEDULE

A601

12/3/2025 2:52 PM

STOREFRONT DETAILS

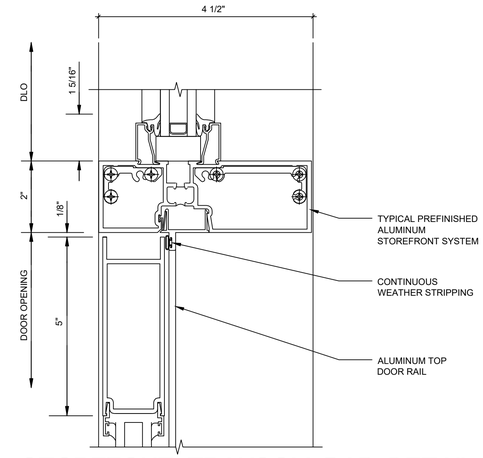

8 **STOREFONT TRANSOM BAR DETAIL**
SCALE: 6" = 1'-0"

NOTE:
DETAILS SHOWN GENERICALLY REPRESENT THE DESIGN INTENT OF THE DOOR AND STOREFRONT SYSTEMS. GRAPHICAL VARIATIONS MAY OCCUR DEPENDING ON SYSTEM TYPE AND MANUFACTURER. THE SPECIFICATIONS, SCHEDULES AND FLORIDA PRODUCT DATA SHALL GOVERN.

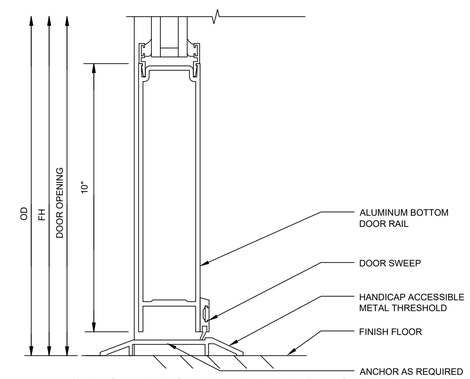

7 **STOREFONT THRESHOLD DETAIL**
SCALE: 6" = 1'-0"

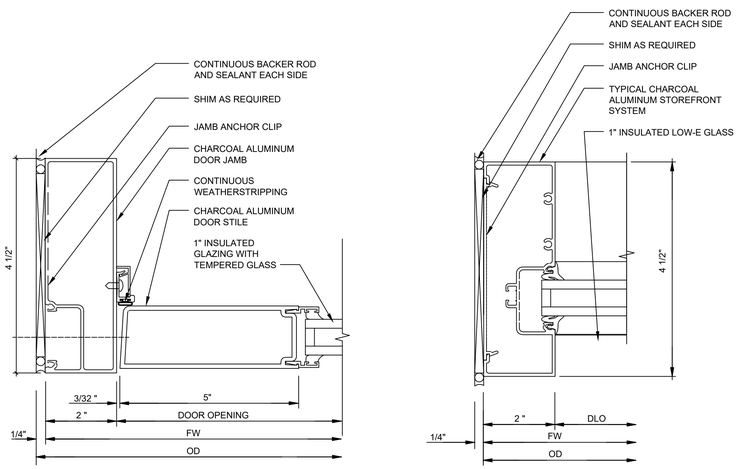

6 **STOREFONT DOOR JAMB DETAIL**
SCALE: 6" = 1'-0"

4 **STOREFONT JAMB DETAIL**
SCALE: 6" = 1'-0"

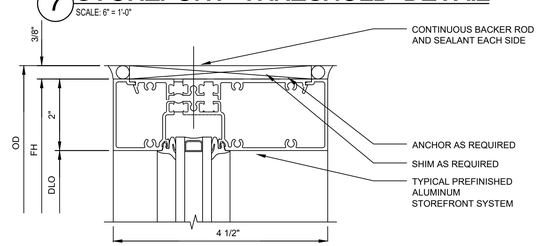

5 **STOREFONT HEAD DETAIL**
SCALE: 6" = 1'-0"

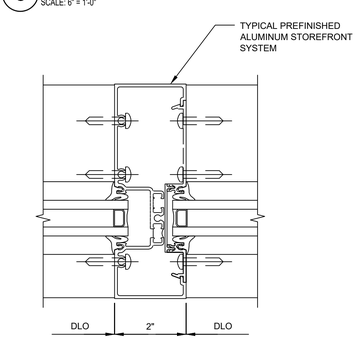

3 **STOREFONT MULLION DETAIL**
SCALE: 6" = 1'-0"

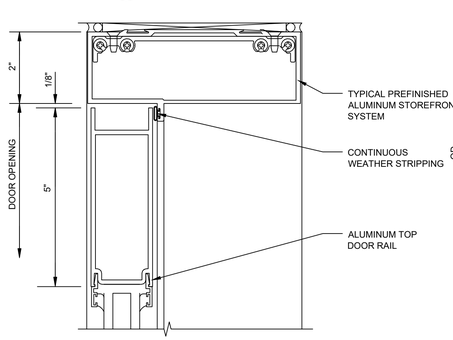

2 **STOREFONT TRANSOM BAR DETAIL**
SCALE: 6" = 1'-0"

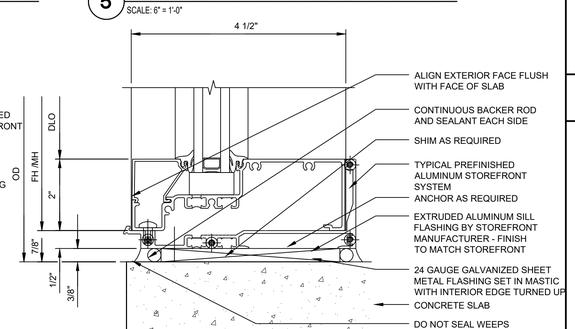

1 **STOREFONT SILL DETAIL**
SCALE: 6" = 1'-0"

GENERAL NOTES

1. ALL WINDOW AND DOOR GLAZING IS TO BE CLEAR/ INSULATED, LOW-E UNLESS NOTED OTHERWISE.
2. WINDOW AND DOOR GLAZING TO BE TEMPERED AT LOCATIONS INDICATED WITH "★"
3. NEW STOREFRONT FRAMING SYSTEM TO BE SUPPLIED BY LANDLORD G.C. FIELD VERIFY FRAMING OPENING SIZES AND MATERIALS PRIOR TO FABRICATION.
4. STOREFRONT GLAZING DESIGN IS BASED ON KAWNEER FRONT SET ALUMINUM STOREFRONT WITH 1" INSULATED GLAZING AND CHARCOAL FINISH, REFER TO SPECS.
5. STOREFRONT SYSTEM IS 2" x 4 1/2" NOMINAL DIMENSION; FRONT SET, UNLESS NOTED OTHERWISE
6. GLAZING PANEL SIZES ARE CONTINGENT ON MANUFACTURER'S LIMITATIONS BASED ON PROJECT SPECIFIC WIND LOADS
7. REFER TO SPECIFICATIONS FOR SPANDREL GLASS REQUIREMENTS (2)

STOREFRONT TYPES

NOTE: ALL VIEWS FROM THE EXTERIOR

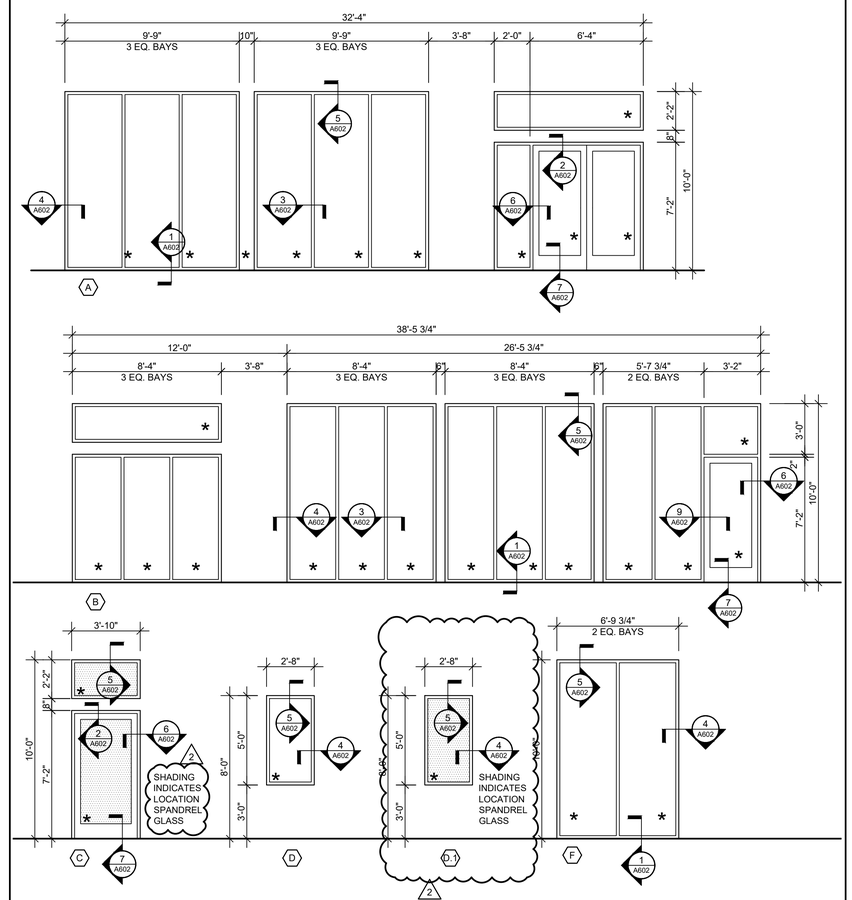

WINDOW TYPES

NOTE: ALL VIEWS FROM THE EXTERIOR

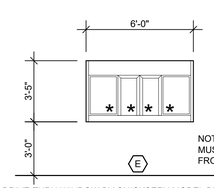

NOTE: FLY FAN REQUIRED AND MUST BE PURCHASED SEPARATELY FROM WINDOW VENDOR

DRIVE-THRU WINDOW BY QUICKSERV MODEL BP-7241E-IP-CHIPOTLE
MIAMI-DADE NOA 23-0816.26
PACKAGE TO INCLUDE THE "THRU-BEAM" SENSORS AND AIR CURTAIN

FWH Architects
3336 Grand Blvd. Suite 201
Holiday, Florida 34690
Ph. 727. 815. 3336
FABER@FWHARCHITECTS.COM

brightwork real estate
3708 WEST SWANN AVE.
SUITE 200
TAMPA, FL 33609
PHONE: 813.874.1700

TO THE BEST OF THE KNOWLEDGE OF THE ARCHITECT'S AND ENGINEERS, SAID PLANS AND SPECIFICATIONS COMPLY WITH THE APPLICABLE MINIMUM BUILDING CODES AND THE APPLICABLE MINIMUM FIRE SAFETY STANDARDS

GUY F. FABER
FL License No. AR0015323
seal

no.	date	revision descriptions
1	12.02.2025	REVISED PER COORDINATION W/ TENANT INTERIORS

CHIPOTLE MEXICAN GRILL
BUILDING SHELL
2000 NOLTE ROAD
ST. CLOUD, FLORIDA 34722

08.29.2025
date
25008
comm. no.
STOREFRONT DETAILS

A602

12/3/2025 2:53 PM

MISCELLANEOUS

1. THE STRUCTURAL SYSTEM IS UNSTABLE UNTIL ALL CONNECTIONS HAVE BEEN MADE AND ALL CONCRETE HAS REACHED ITS MINIMUM DESIGN STRENGTH, AS SHOWN IN THE STRUCTURAL DOCUMENTS.

2. THE STRUCTURAL DOCUMENTS AND SPECIFICATIONS REPRESENT THE FINISHED STRUCTURE AND DO NOT INDICATE THE METHOD OR MEANS OF CONSTRUCTION. THE CONTRACTOR SHALL BE SOLELY RESPONSIBLE FOR ALL CONSTRUCTION MEANS, METHODS, PROCEDURES, TECHNIQUES AND SEQUENCES.

3. CONTRACTOR TO SUPPORT, BRACE AND SECURE EXISTING STRUCTURE AS REQUIRED. CONTRACTOR IS SOLELY RESPONSIBLE FOR THE SAFETY OF THE BUILDING DURING CONSTRUCTION.

4. APPLICABLE BUILDING CODE: FLORIDA BUILDING CODE 8TH EDITION (2023).

5. ALL MATERIALS AND WORKMANSHIP SHALL BE IN ACCORDANCE WITH THE FLORIDA BUILDING CODE 8TH EDITION (2023).

6. DESIGN GRAVITY LOADS:

AREA	SUPERIMPOSED LIVE LOAD (FBC, TABLE 1607.1)
ROOF	20 PSF
FLOOR	100 PSF (SLAB-ON-GROUND)
STEEL CANOPY	20 PSF

AREA	DEAD LOAD
ROOF	20 PSF

7. ULTIMATE DESIGN WIND SPEED = 140 MPH (FBC, FIGURE 1609.3.1)
ASD NOMINAL DESIGN WIND SPEED = 108 MPH (FBC, TABLE 1609.3.1)
RISK CATEGORY II (FBC, TABLE 1604.5)
REFER TO 1/S0.1 FOR WIND PRESSURES AND MORE INFO.

8. RAIN INTENSITY: 7.10 IN/HR (15-MIN), 3.82 IN/HR (60-MIN)

9. COORDINATE ALL DIMENSIONS AND ELEVATIONS WITH THE ARCHITECTURAL DRAWINGS. DO NOT SCALE DRAWINGS.

10. CONTACT ENGINEER WITH ANY QUESTIONS OR DISCREPANCIES FOUND ON DRAWINGS.

11. THESE GENERAL NOTES SUPPLEMENT THE PROJECT SPECIFICATIONS. REFER TO PROJECT SPECIFICATIONS FOR ADDITIONAL REQUIREMENTS.

12. NO CHANGE IN SIZE OR DIMENSION OF STRUCTURAL MEMBERS SHALL BE MADE WITHOUT THE WRITTEN APPROVAL OF THE PROFESSIONAL OF RECORD.

13. THE CONTRACTOR IS RESPONSIBLE FOR LIMITING THE AMOUNT OF CONSTRUCTION LOAD IMPOSED UPON STRUCTURAL FRAMING. CONSTRUCTION LOADS SHALL NOT EXCEED THE DESIGN CAPACITY OF THE FRAMING AT THE TIME THE LOADS ARE IMPOSED.

14. THE CONTRACTOR SHALL INFORM THE PROFESSIONAL OF RECORD IN WRITING OF ANY DEVIATION FROM THE CONTRACT DOCUMENTS. THE CONTRACTOR SHALL NOT BE RELIEVED OF THE RESPONSIBILITY OF SUCH DEVIATION BY THE PROFESSIONAL OF RECORD'S REVIEW OF SHOP DRAWINGS, PRODUCT DATA, ETC., UNLESS THE CONTRACTOR HAS SPECIFICALLY INFORMED THE PROFESSIONAL OF RECORD OF SUCH DEVIATION AT THE TIME OF SUBMISSION, AND THE PROFESSIONAL OF RECORD HAS GIVEN WRITTEN APPROVAL TO THE SPECIFIC DEVIATION.

MATERIAL AND SHOP DRAWING SUBMITTALS

1. SHOP DRAWINGS SHALL BE REVIEWED BY THE CONTRACTOR AND MARKED "APPROVED" PRIOR TO SUBMITTING TO THE ARCHITECT. NON-CONFORMING SUBMITTALS WILL BE RETURNED WITHOUT REVIEW.

2. SUBMIT SHOP DRAWINGS AS REQUIRED HEREIN IN DIGITAL PDF FORMAT WITH A HIGH-RESOLUTION. ALLOW FOR TWO WEEKS REVIEW TIME AFTER RECEIPT OF SUBMITTALS BY THIS FIRM. ALL SUBMITTALS SHALL BE SIGNED/SEALED BY THE SPECIALTY OR DELEGATED ENGINEER, AS NOTED BELOW. REFER TO THE SPECIFIC SECTION ON THIS SHEET FOR MORE INFORMATION REGARDING THE SHOP DRAWING SUBMITTAL.
A) STRUCTURAL STEEL
B) CONCRETE MIX DESIGN
C) CONCRETE REINFORCING STEEL
D) MASONRY REINFORCING STEEL
E) PRECAST CONCRETE MASONRY
F) COLD-FORMED METAL FRAMING (SEALED DRAWINGS & CALCULATIONS)
G) PRE-ENGINEERED TRUSSES (SEALED DRAWINGS & CALCULATIONS)

3. CONTRACTOR SHALL NOT BE RELIEVED FROM RESPONSIBILITY FOR ERRORS OR OMISSIONS IN SHOP DRAWINGS OR MIX DESIGNS BY THE ENGINEER'S REVIEW THEREOF.

4. SHOP DRAWINGS WILL BE REVIEWED FOR GENERAL COMPLIANCE WITH THE DESIGN INTENT OF THE CONTRACT DOCUMENTS ONLY. IT SHALL BE THE RESPONSIBILITY OF THE CONTRACTOR TO VERIFY COMPLIANCE WITH THE CONTRACT DOCUMENTS AS TO QUANTITY, LENGTHS, DIMENSIONS, ETC.

5. SHOP DRAWING REVIEW COMMENTS BY THIS FIRM SHALL BE TRANSMITTED TO THE ARCHITECT OF RECORD ONLY FOR THEIR REVIEW. THE ARCHITECT WILL TRANSMIT AN ELECTRONIC COPY OF ALL REVIEWED SUBMITTALS TO THE CONTRACTOR. THE CONTRACTOR IS RESPONSIBLE FOR DISTRIBUTING THE REVIEWED SHOP DRAWINGS TO THE IMPACTED TRADES OR SUBCONTRACTORS.

6. CHANGES AND ADDITIONS MADE ON SHOP DRAWING RE-SUBMITTALS SHALL BE CLEARLY FLAGGED AND NOTED AS SUCH. THE PURPOSE OF THE RE-SUBMITTAL SHALL BE NOTED IN THE SUBMITTAL OR ON A TRANSMITTAL ATTACHED TO THE SHOP DRAWINGS. A RE-REVIEW OF THE REVISED SHOP DRAWING SUBMITTAL WILL BE LIMITED TO THOSE ITEMS CAUSING THE RE-SUBMITTAL. THE CONTRACTOR IS RESPONSIBLE FOR THE COSTS ASSOCIATED WITH RE-SUBMITTING MULTIPLE (MORE THAN ONE) SHOP DRAWING SUBMITTALS AT THE ENGINEER OF RECORD'S HOURLY RATES.

DELEGATED ENGINEERING

1. A LICENSED PROFESSIONAL (DELEGATED) ENGINEER SHALL BE RETAINED TO DESIGN THE FOLLOWING:
1) WOOD ROOF TRUSSES

2. THE DELEGATED ENGINEER SHALL BE EXPERIENCED IN THE DESIGN OF THE REFERENCED PRODUCT OR ASSEMBLY.

3. THE DELEGATED ENGINEER MUST BE PROVIDED WITH A COPY OF THESE DRAWINGS AND SPECIFICATIONS.

4. IT IS THE DELEGATED ENGINEER'S RESPONSIBILTY TO REVIEW THE ENGINEER OF RECORD'S WRITTEN ENGINEERING REQUIREMENTS AND AUTHORIZATION FOR THE DELEGATED ENGINEERING DOCUMENT TO DETERMINE THE APPROPRIATE SCOPE OF ENGINEERING.

5. THE DELEGATED ENGINEERING DOCUMENT SHALL COMPLY WITH THE WRITTEN ENGINEERING REQUIREMENTS RECEIVED FROM THE ENGINEER OF RECORD. THEY SHALL INCLUDE THE PROJECT IDENTIFICATION AND THE CRITERIA USED AS A BASIS FOR ITS PREPARATION. IF A DELEGATED ENGINEER DETERMINES THERE ARE DETAILS, FEATURES OR UNANTICIPATED PROJECT LIMITS WHICH CONFLICT WITH THE WRITTEN ENGINEERING REQUIREMENTS PROVIDED BY THE ENIGINEER OF RECORD, THE DELEGATED ENGINEER SHALL TIMELY CONTACT THE ENGINEER OF RECORD FOR RESOLUTION OF CONFLICTS.

6. THE DELEGATED ENGINEER SHALL FORWARD THE DELEGATED ENGINEERING DOCUMENT TO THE ENGINEER OF RECORD FOR REVIEW. ALL FINAL DELEGATED ENGINEERING DOCUMENTS REQUIRE THE SEAL AND SIGNATURE OF THE DELEGATE ENGINEER AND INCLUDE: A) DRAWINGS INTRODUCING ENGINEERING INPUT SUCH AS DEFINING THE CONFIGURATION OR STRUCTURAL CAPACITY OF STRUCTURAL COMPONENTS AND/OR THEIR ASSEMBLY INTO STRUCTURAL SYSTEMS. B) CALCULATIONS.

SITE WORK

1. A SUBSURFACE INVESTIGATION HAS BEEN COMPLETED AT THE PROJECT SITE BY NATIVE GEOSCIENCE, INC. PROJECT NO. R0792.4 SOIL BORING LOGS AND SITE PREPARATION PROCEDURES ARE INCLUDED IN THE PROJECT SOILS REPORT, DATED AUGUST 13, 2024 WHICH IS AN INTEGRAL PART OF THESE CONTRACT DOCUMENTS.

2. ALL SITE PREPARATION WORK SHALL BE DONE IN STRICT ACCORDANCE WITH THE PROJECT SOILS REPORT. THE SITE SHALL BE CLEARED OF ANY DELETERIOUS MATERIALS, ORGANICS AND BURIED DEBRIS AND PROOF-ROLLED. COMPACTION OF THE SOIL SHALL MEET 95% STANDARD PROCTOR DRY DENSITY (MINIMUM).

3. DESIGN SOIL BEARING PRESSURE = 2,000 PSF.

4. THE SLAB/FOUNDATION DESIGN IS BASED ON A "SPREAD OR CONTINUOUS FOOTINGS OPTION". THE CONTRACTOR SHALL PREPARE THE SUBGRADE AS OUTLINED IN THE REPORT. EXTEND THE FOOTPRINT OF THE EXCAVATED AREA A MINIMUM OF 5 FEET BEYOND THE GENERAL BUILDING LINES. EXCAVATED AREAS SHALL EXTEND TO THE OUTER LIMITS OF THE SIDEWALKS AS A MINIMUM AS WELL.

5. A QUALIFIED GEOTECHNICAL ENGINEER SHALL BE PRESENT TO OVERSEE THE SUBGRADE MODIFICATION, TO EVALUATE THE SUBGRADE SOILS FOR SUITABLILITY, TO DETERMINE THE FOR DENSITY. THE CONTRACTOR/OWNER SHALL USE THE SAME GEOTECHNICAL ENGINEER THAT PREPARED THE GEOTECHNICAL REPORT FOR FOUNDATION TESTING/INSPECTIONS.

6. THE FOLLOWING TESTS SHALL BE PERFORMED (MINIMUM):
A) ONE DENSITY TEST FOR EACH 2,000 SQUARE FEET OF COMPACTED SUBGRADE AND COMPACTED FILL.
B) ONE DENSITY TEST AT EACH COLUMN FOOTING.
C) ONE DENSITY TEST PER 50 FEET OF WALL FOOTING.

7. THE CONTRACTOR SHALL NOTIFY THE ARCHITECT AND TESTING LABORATORY AT LEAST 24 HOURS PRIOR TO PLACEMENT OF CONCRETE.

8. ONE COPY OF ALL TEST REPORTS SHALL BE SENT DIRECTLY TO OWNER, ARCHITECT, STRUCTURAL ENGINEER, AND GENERAL CONTRACTOR.

9. A GEOTECHNICAL ENGINEER SHALL VERIFY THAT SOILS OF THE DESIGN BEARING CAPACITY HAVE BEEN ENCOUNTERED AND THAT THE BUILDING PAD IS SUITABLE FOR CONSTRUCITON.

10. THE SIDES OF FOOTINGS MAY BE EARTH-FORMED IF THE EXCAVATION CAN BE KEPT VERTICAL, CLEAN, AND STABLE; OTHERWISE, PLYWOOD FORMS MUST BE USED.

11. FOUNDATION WALLS THAT RETAIN EARTH SHALL BE BRACED AGAINST BACKFILLING PRESSURES UNTIL FLOOR SLABS AT TOP AND BOTTOM ARE IN PLACE.

12. POSITIVE SITE DRAINAGE SHALL BE MAINTAINED TO DIVERT WATER AWAY FROM THE BUILDING AREAS.

13. THE ABOVE REQUIREMENTS ARE A SUMMARY OF THE REQUIREMENTS OF THE GEOTECHNICAL REPORT. THE CONTRACTOR SHALL NOT BE ABSOLVED FROM THE RESPONSIBILTY OF REVIEWING AND COMPLYING WITH THE ENTIRE GEOTECHNICAL REPORT.

CAST IN PLACE CONCRETE

1. CONCRETE TO BE NORMAL WEIGHT WITH THE FOLLOWING MINIMUM COMPRESSIVE STRENGTHS AT 28 DAYS:
A) FOOTINGS, SLAB-ON-GRADE...........3000 PSI

2. CONCRETE SHALL BE READYMIX PER ASTM C94:
A) PORTLAND CEMENT – ASTM C 150
B) AGGREGATES – ASTM C33 (3/4" MAX.)
C) NO CALCIUM CHLORIDE
D) AIR ENTRAINING – ASTM C260
E) WATER REDUCING – ASTM C494
F) FLYASH – ASTM C618 CLASS F (20% MAXIMUM BY WEIGHT)
G) WATER – CLEAN AND POTABLE

3. REINFORCING STEEL: ASTM A615 GRADE 60.

4. REQUIRED SLUMP RANGE = 3" TO 5".

5. WELDED WIRE FABRIC: ASTM A-185. FURNISH IN SHEETS, NOT ROLLS.

6. MOISTURE/VAPOR RETARDER: 10 MIL POLYETHYLENE. LAP 6" AND TAPE ALL JOINTS.

7. CODES AND STANDARDS: (CURRENT EDITION)
ACI 301 "SPEC FOR STRUCTURAL CONCRETE FOR BUILDINGS."
ACI 305 "RECOMMENDED PRACTICE FOR HOT WEATHER CONCRETING."
ACI 318 "BLDG. CODE REQUIREMENTS FOR REINF. CONCRETE."
ACI 315 "DETAILS AND DETAILING OF CONCRETE REINFORCEMENT."

8. MINIMUM LAP SPLICE = 36 BAR DIAMETERS UNLESS NOTED OTHERWISE.

9. PROVIDE PROPERLY TIED SPACERS, CHAIRS, BOLSTERS, ETC, AS REQUIRED AND NECESSARY TO ASSEMBLE, PLACE AND SUPPORT ALL REINFORCING IN PLACE. USE WIRE BAR TYPE SUPPORTS COMPLYING WITH CRSI RECOMMENDATIONS. USE PLASTIC TIP LEGS ON ALL EXPOSED SURFACES.

10. CONTRACTOR SHALL VERIFY LOCATIONS OF ALL OPENINGS, SLEEVES, AND SLAB RECESSES AS REQUIRED BY OTHER TRADES BEFORE CONCRETE IS PLACED. NO SLEEVE, OPENING, OR INSERT MAY BE PLACED IN BEAMS, JOISTS, OR COLUMNS UNLESS APPROVED BY THE ENGINEER.

11. CONTRACTOR SHALL VERIFY EMBEDDED ITEMS, INCLUDING BUT NOT LIMITED TO ANCHOR BOLTS, BOLT CLUSTERS, WELD PLATES, ETC..., BEFORE PLACING CONCRETE. NOTIFY ENGINEER OF ANY CONFLICTS WITH REBAR.

12. SEE ARCHITECTURAL DRAWINGS FOR REQUIRED CONCRETE FINISHES.

13. ALL CONCRETE SHALL BE CURED IMMEDIATELY AFTER FINISHING OPERATIONS IN ACCORDANCE WITH ONE OF THE FOLLOWING METHODS:
A) APPLY A 30% SOLIDS LIQUID MEMBRANE FORMING CHEMICAL CURING COMPOUND IN ACCORDANCE WITH ASTM C-309.
B) PROVIDE CONTINUOUS MOISTURE TO CONCRETE IN ACCORDANCE WITH ACI 301.

14. A QUALIFIED TESTING LABORATORY SHALL BE RETAINED TO PERFORM THE FOLLOWING CONCRETE TESTS ON SITE.
A) CYLINDER STRENGTH TESTS – ASTM C39; ONE SET OF FOUR CYLINDERS FOR EACH 50 CUBIC YARDS OR FRACTION THEREOF. TEST ONE CYLINDER AT 7 DAYS AND TWO AT 28 DAYS. HOLD THE FINAL CYLINDER IN RESERVE.
B) SLUMP TESTS – ASTM C143

15. ONE COPY OF ALL TEST REPORTS SHALL BE SENT DIRECTLY TO OWNER, ARCHITECT, STRUCTURAL ENGINEER, AND GENERAL CONTRACTOR.

16. RESTRICT THE ADDITION OF MIX WATER AT THE JOB SITE. DO NOT ADD WATER WITHOUT THE APPROVAL OF THE GENERAL CONTRACTOR AND DO NOT EXCEED SLUMP LIMITATIONS OR TOTAL ALLOWABLE WATER TO CEMENT RATIO. USE COLD WATER FROM THE TRUCK TANK AND REMIX TO ACHIEVE CONSISTENCY. TEST REPORTS SHALL INDICATE QUANTITY OF WATER ADDED AT THE JOB SITE. ALL TESTS SHALL BE PREPARED AFTER THE ADDITION OF WATER TO THE MIX.

17. MAXIMUM WATER TO CEMENT RATIO WHEN NO BACK-UP DATA IS AVAILABLE:
A) 3000 PSI, 28-DAY COMPRESSIVE STRENGTH; W/C RATIO, 0.58 MAXIMUM (NON-AIR-ENTRAINED), 0.47 MAXIMUM (AIR-ENTRAINED).

18. REINFORCING BAR COVER:
A) FOOTINGS 3"
B) SLABS 3/4" (INTERIOR) 1-1/2" (EXTERIOR)

19. CONCRETE SHALL BE PLACED WITHIN 90 MINUTES OF BATCH TIME.

20. WHERE BAR LENGTHS ARE GIVEN ON DRAWINGS, LENGTH OF HOOK, IF REQUIRED, IS NOT INCLUDED.

21. PROVIDE COMMERCIAL FORM COATING COMPOUNDS THAT WILL NOT BOND, STAIN, OR ADVERSELY AFFECT CONCRETE SURFACES. WET FORMS BEFORE PLACING CONCRETE.

22. ALL CONCRETE SHALL BE CONSOLIDATED IN PLACE USING INTERNAL VIBRATORS.

23. REPAIR AND PATCH DEFECTIVE AREAS WITH CEMENT MORTAR IMMEDIATELY AFTER REMOVAL OF FORMS, EXCEPT WHERE REINFORCING IS VISIBLE. CONTACT STRUCTURAL ENGINEER FOR EVALUATION OF EXPOSED REINFORCING.

24. PROVIDE CORNER BARS AT ALL BEAM AND WALL FOOTING CORNERS TO MATCH HORIZONTAL BARS.

25. SUBMITTALS:
A) SUBMIT PROPOSED CONCRETE MIX DESIGN PRIOR TO CONSTRUCTION, INCLUDING BACKUP DATA IN ACCORDANCE WITH ACI 301-99 CHAPTER 4, SECTION 4.2.3, EXCLUDING SECTION 4.2.3.4B, INDICATING WHERE CONCRETE IS TO PLACED WITHIN THE STRUCTURE.
B) SUBMIT DETAILED SHOP DRAWINGS OF REINFORCING BARS SHOWING NUMBER, SIZE, AND LOCATION. INCLUDE BAR LISTS AND BEND DIAGRAMS.

26. SLOPE ALL WALKWAYS AWAY FROM THE BUILDING.

MASONRY

1. MASONRY INSPECTION SHALL BE PROVIDED BY A QUALIFIED AGENT IN ACCORDANCE WITH TMS 602-1.6. INSPECTION SERVICES SHALL INCLUDE, BUT ARE NOT LIMITED TO, THE WORK IN PROGRESS AS WELL AS MATERIALS, EQUIPMENT, AND PROCEDURES.

2. HOLLOW LOAD BEARING UNITS SHALL CONFORM TO ASTM C90, NORMAL WEIGHT, TYPE II. MINIMUM NET COMPRESSIVE UNIT STRENGTH = 1900 PSI. (NET AREA COMPRESSIVE MASONRY STRENGTH F'M = 1500 PSI).

3. MORTAR SHALL BE TYPE M OR S AND CONFORM TO ASTM C270 (PROPORTION OR PROPERTY SPECIFICATION).

4. COARSE GROUT SHALL CONFORM TO ASTM C476:
A) 3000 PSI AT 28 DAYS.
B) 1/4" MAXIMUM AGGREGATE.
C) 8" – 11" SLUMP.

5. CODES AND STANDARDS:
TMS 402 "BUILDING CODE REQUIREMENTS FOR MASONRY STRUCTURES"
TMS 602 "SPECIFICATIONS FOR MASONRY STRUCTURES"

6. PLACE ALL MASONRY IN RUNNING BOND WITH 3/8" MORTAR JOINTS. PROVIDE COMPLETE COVERAGE FACE SHELL MORTAR BEDDING, HORIZONTAL AND VERTICAL. FULLY MORTAR WEBS IN ALL COURSES OF PIERS, COLUMNS, AND PILASTERS AND ADJACENT TO GROUTED CELLS.

7. A REINFORCED CONCRETE TIE BEAM SHALL BE PROVIDED IN ALL WALLS SHOWN ON THE STRUCTURAL DRAWINGS AT EACH FLOOR, THE ROOF, AND AT TOP OF ANY PARAPET WALL. USE GALVANIZED MESH-TYPE CELL CAPS. PROVIDE CORNER BARS AT ALL BEAM CORNERS TO MATCH HORIZONTAL BARS.

8. UNLESS NOTED OTHERWISE, TIE BEAMS SHALL BE AS FOLLOWS:
A) ROOF LEVEL: DOUBLE COURSE KNOCK-OUT BLOCKS WITH (1) #5 BAR IN EACH COURSE, FULLY GROUTED.
B) TOP OF PARAPET: (1) #5 BAR IN GROUTED KNOCK-OUT BLOCKS.

9. VERTICAL BARS SHALL BE HELD IN POSITION AT THE TOP AND BOTTOM OF BAR AND AT 8'-0" O.C. MAXIMUM WITH A MINIMUM CLEARANCE OF 1/2" FROM MASONRY. THE CLEAR DISTANCE BETWEEN BARS SHALL NOT BE LESS THAN ONE BAR DIAMETER, NOR LESS THAN 1". CENTER BARS IN WALLS U.N.O.

10. VERTICAL REINFORCING SHALL BE AS SHOWN ON THE DRAWINGS. FILL CELLS WITH COARSE GROUT AS SPECIFIED. PROVIDE ACI 90 DEGREE STANDARD HOOKS INTO FOOTING AND ROOF TIE BEAM. LAP SPLICE VERTICAL REINFORCEMENT ABOVE FOOTING AND ABOVE EACH FLOOR LEVEL UNLESS NOTED OTHERWISE. MAINTAIN VERTICAL REINFORCING SHOWN ON PLANS ABOVE AND BELOW MASONRY OPENINGS EXCEEDING 10'-0" CLEAR. CONTINUE FOUNDATION DOWELS BELOW ALL MASONRY OPENINGS.

11. ALL REINFORCED FILL CELLS ARE TO BE CLEAN AND FREE OF ANY FOREIGN MATERIAL OR DEBRIS. REMOVE ANY FOREIGN MATERIAL FROM FILL CELLS, INCLUDING POLYSTYRENE INSULATING INSERTS, PRIOR TO GROUT POUR.

12. REINFORCING BARS SHALL BE STRAIGHT EXCEPT FOR BENDS AROUND CORNERS AND WHERE BENDS OR HOOKS ARE DETAILED ON THE PLANS.

13. WHEN A FOUNDATION DOWEL DOES NOT LINE UP WITH A VERTICAL CORE, IT SHALL NOT BE SLOPED MORE THAN ONE HORIZONTAL IN SIX VERTICALS. DOWELS SHALL BE GROUTED INTO A CORE IN VERTICAL ALIGNMENT, EVEN THOUGH IT IS IN AN ADJACENT CELL TO THE VERTICAL WALL REINFORCEMENT.

14. PROVIDE CONTINUOUS HORIZONTAL WALL REINFORCING 9 GA. HOT-DIPPED GALVANIZED LADDER TYPE DUR-O-WALL (OR EQUIVALENT) AT 16" O.C.

15. PROVIDE HORIZONTAL JOINT REINFORCEMENT AT DOORS AND WINDOWS FOR FIRST AND SECOND BLOCK COURSE ABOVE AND BELOW APERTURES. RUN REINFORCING CONTINUOUS OR EXTEND TWO FEET FROM APERTURE EDGE.

16. WIRE REINFORCEMENT SHALL BE LAPPED AT LEAST 6" AT SPLICES AND SHALL CONTAIN AT LEAST ONE CROSS WIRE OF EACH PIECE OF REINFORCEMENT IN THE LAPPED DISTANCE.

17. CLEANOUTS SHALL BE PROVIDED IN THE BOTTOM COURSE OF MASONRY IN EACH GROUT POUR WHEN THE POUR HEIGHT EXCEEDS 5'. CLEANOUTS TO BE SAW-CUT 3" X 3".

18. GROUT POUR HEIGHT SHALL NOT EXCEED 24'. PLACE GROUT IN 5' MAX. LIFTS HEIGHTS.

19. CONSOLIDATE GROUT POURS AT THE TIME OF PLACEMENT BY MECHANICAL MEANS AND RECONSOLIDATE AFTER INITIAL WATER LOSS AND SETTLEMENT.

20. SEE DRAWINGS FOR MASONRY CONTROL JOINT LOCATIONS. SPACE AT 26'-0" O.C. AT EXTERIOR WALLS, 32'-0" O.C. MAXIMUM UNLESS NOTED OTHERWISE.

21. SUBMITTALS:
A) SUBMIT PROPOSED GROUT MIX DESIGN PRIOR TO CONSTRUCTION.
B) SUBMIT PROPOSED MORTAR MIX DESIGN PRIOR TO CONSTRUCTION.
C) SUBMIT DETAILED SHOP DRAWINGS OF REINFORCING BARS SHOWING NUMBER, SIZE, AND LOCATION. INCLUDE BAR LISTS AND BEND DIAGRAMS.
D) SUBMIT COMPRESSIVE STRENGTH TESTS OF PROPOSED MASONRY UNITS PRIOR TO CONSTRUCTION. MASONRY UNITS ARE TO BE TESTED IN ACCORDANCE WITH ASTM C140.

22. A QUALIFIED TESTING LABORATORY SHALL BE RETAINED TO PERFORM THE FOLLOWING TESTS:
A) SAMPLE AND TEST GROUT IN ACCORDANCE WITH ASTM C1019 FOR EACH 5000 SQ. FT. OF MASONRY.
B) SLUMP TESTS – ASTM C143.

23. PROVIDE 8" DEEP PRECAST REINFORCED CONCRETE LINTELS OVER ALL MASONRY OPENINGS NOT SHOWN TO HAVE A STRUCTURAL BEAM. MINIMUM END BEARING = 8". LINTEL WIDTH TO MATCH MASONRY WIDTH.

STRUCTURAL STEEL

1. STRUCTURAL STEEL SHALL CONFORM TO THE AISC "SPECIFICATION FOR THE DESIGN, FABRICATION AND ERECTION OF STRUCTURAL STEEL FOR BUILDINGS", LATEST EDITION, EXCEPT CHAPTER 4.2.1, CODE OF STANDARD PRACTICE.

2. WELDED CONNECTIONS SHALL CONFORM TO THE LATEST REVISED CODE OF THE AMERICAN WELDING SOCIETY, AWS D1.1. ALL WELDING SHALL BE PERFORMED USING E70XX, LOW HYDROGEN ELECTRODES, U.N.O. ELECTRODES ARE TO BE PROTECTED FROM MOISTURE.

3. ALL CONNECTIONS TO BE DOUBLE ANGLE FRAMED BEAM CONNECTION PER AISC UNLESS NOTED OTHERWISE. ALL BOLTS TO BE 3/4" DIAMETER UNLESS NOTED OTHERWISE. SHOP CONNECTIONS MAY BE WELDED OR BOLTED. WELDS ARE TO BE EQUAL IN STRENGTH TO BOLTS. ALL FIELD CONNECTIONS ARE TO BE BOLTED WITH ASTM A325N OR A490 BOLTS (BEARING TYPE BOLTS WITH THREADS IN THE SHEAR PLANE) INCLUDING SUITABLE NUTS AND PLAIN HARDENED WASHERS. ALL BOLTS SHALL BE TIGHTENED SNUG TIGHT UNLESS OTHERWISE NOTED. DESIGN CONNECTIONS FOR THE LARGER OF EITHER THE SHEAR SHOWN ON THE DRAWINGS, (INDICATED AS "V =K" AT ENDS OF MEMBER) OR 55% OF THE MAXIMUM SHEAR (V IN KIPS) LISTED IN THE TABLES FOR "ALLOWABLE UNIFORM LOADS IN KIPS FOR BEAMS LATERALLY SUPPORTED" AT THE BOTTOM OF EACH PAGE IN THE "PROPERTIES AND REACTION VALUES", PART 2 OF THE LATEST EDITION OF THE AISC "MANUAL OF STEEL CONSTRUCTION".

4. SIZE AND USE OF HOLES: SEE AISC TABLE J3.3 U.N.O.
A) OVERSIZED OR LONG-SLOTTED HOLES ARE NOT PERMITTED U.N.O. MAXIMUM HOLE DIAMETER = BOLT DIAMETER + 1/16".
B) LARGER HOLES ARE PERMITTED IN STANDARD COLUMN BASE PLATES. MAXIMUM HOLE DIAMETER = BOLT DIAMETER + 3/8". HARDENED WASHERS, TO COVER THE LARGER HOLE, SHALL BE PROVIDED.
C) LARGER HOLES ARE NOT PERMITTED IN WIND FRAME COLUMN BASE PLATES. MAXIMUM HOLE DIAMETER = BOLT DIAMETER + 1/16".
D) SLOTTED HOLES: A PLATE WASHER OR A CONTINUOUS BAR WITH STANDARD HOLES, HAVING A SIZE SUFFICIENT TO COMPLETELY COVER THE SLOT AFTER INSTALLATION, AND A MIN. OF 5/16" THICK SHALL BE PROVIDED. TACK WELD NUT TO BOLT AFTER ERECTION.

5. ALL STEEL BEAMS SHALL BE FABRICATED WITH THE NATURAL CAMBER (WITHIN THE MILL TOLERANCE) LOCATED ABOVE THE HORIZONTAL CENTERLINE BETWEEN THE END CONNECTIONS.

6. VERIFY THE EXACT SIZE AND LOCATION OF ALL FLOOR AND ROOF OPENINGS FOR MECHANICAL EQUIPMENT WITH THE MECHANICAL CONTRACTOR PRIOR TO FABRICATION OF MATERIALS.

7. SHOP PAINT – METAL ALKYD-OIL PRIMER, ANY OF THE FOLLOWING: SEE ARCHITECT FOR PREFERRED COLOR.

MANUFACTURER	DESIGNATION
PORTER	NO. 298
MOBILE	NO. 13F812
TINEMEC	NO. 1009
AMERON	NO. 5102 AMERCOAT

SHOP PAINT ALL SURFACES OF STEEL EXCEPT ANCHOR BOLTS AND SURFACES TO BE FIELD WELDED. APPLY PAINT IN ACCORDANCE WITH SSPC-PA1, SHOP FIELD AND MAINTENANCE PAINTING. APPLY PAINT IN SUFFICIENT VOLUME OR COATS TO PROVIDE A MINIMUM DRY FILM THICKNESS OF AT LEAST 3 MILS BUT NOT MORE THAN 5 MILS.

8. SURFACE PREPARATION – PREPARE STEEL SURFACE IN ACCORDANCE WITH SSPC-SP3 POWER TOOL CLEANING. ANY METHOD IN CONFORMANCE WITH AN SSPC SPECIFICATION OF HIGHER QUALITY THAN LISTED WILL BE ACCEPTABLE. AT OPTION OF CONTRACTOR, WHEELABRATOR MAY BE USED FOR PREPARATION OF STEEL SURFACES, PROVIDING RESULTANT SURFACE IS EQUAL IN ALL RESPECTS TO THOSE REQUIRED.

9. A QUALIFIED TESTING LABORATORY SHALL BE RETAINED TO PERFORM THE FOLLOWING TESTS.
A) VISUALLY INSPECT ALL STEEL MEMBERS AND CONNECTIONS.
B) TEST 50 PERCENT OF FULL PENETRATION WELDS.

10. ONE COPY OF ALL TEST REPORTS SHALL BE SENT DIRECTLY TO OWNER, ARCHITECT, STRUCTURAL ENGINEER, AND GENERAL CONTRACTOR.

11. STRUCTURAL STEEL SHAPES, TEES – ASTM A992.

12. STRUCTURAL STEEL ANGLES, CHANNELS, PLATES, BARS – ASTM A36.

13. STRUCTURAL STEEL TUBING – ASTM A500 GRADE B OR C.

14. STEEL PIPE – ASTM A53 GRADE B.

15. ANCHOR BOLTS – F1554 GRADE 36.

16. OPENINGS THROUGH STEEL BEAMS SHALL BE PROVIDED AS DETAILED ON THE DRAWINGS. ALL SUCH OPENINGS SHALL BE MACHINE CUT IN THE SHOP. ALL RECTANGULAR OPENINGS SHALL HAVE A CORNER RADIUS OF 2 TIMES THE WEB THICKNESS, 1/2" MINIMUM.

17. COLUMN SPLICES SHALL BE DESIGNED IN ACCORDANCE WITH TABLE A-7, PAGE 11-A12 OF THE AISC "STRUCTURAL STEEL DETAILING" MANUAL.

18. NO SPLICES SHALL BE PERMITTED IN ANY STRUCTURAL STEEL MEMBER UNLESS SHOWN ON APPROVED SHOP DRAWINGS.

19. SUBMITTALS: CONTRACTOR SHALL SUBMIT DETAILED SHOP DRAWINGS SHOWING ALL STRUCTURAL STEEL LAYOUTS AND DETAILS, SIZES OF MEMBERS, TYPE OF STEEL, CONNECTION DETAILS, WELDS, BOLTS, ETC., AS REQUIRED TO FABRICATE AND ERECT ALL STRUCTURAL STEEL FRAMING. ALL CONNECTIONS NOT SHOWN ON THE STRUCTURAL DRAWINGS SHALL BE BY THE DETAILER AND SUBMITTED ON SHOP DRAWINGS.

20. NON-SHRINK GROUT SHALL BE: NONMETALLIC SHRINKAGE-RESISTANT GROUT, PREMIXED, NONMETALLIC, NONCORROSIVE, NONSTAINING PRODUCT CONTAINING SELECTED SILICA SANDS, PORTLAND CEMENT, SHRINKAGE COMPENSATING AGENTS, PLASTICIZING AND WATER-REDUCING AGENTS, COMPLYING WITH CE-CRD-C621.

21. NO FIELD WELDING OF GALVANIZED MEMBERS IS PERMITTED.

22. ERECTION
A) BEFORE ERECTION, THE CONTRACTOR IS TO REMOVE ALL MUD, DIRT OR OTHER FOREIGN MATTER, WHICH ACCUMULATES DURING HANDLING AND STORAGE.
B) DRIFTING TO ENLARGE UNFAIR HOLES WILL NOT BE PERMITTED. DRILL SUCH HOLES TO ACCOMMODATE THE NEXT LARGER SIZE FASTENER, WHERE POSSIBLE.
C) AFTER ERECTION, CLEAN FIELD WELDS, BOLTED CONNECTIONS, AND ABRADED AREAS WHERE SHOP COAT HAS BEEN DAMAGED. SPOT AND PRIME AREAS USING SAME MATERIAL AS SHOP COAT.
D) SET ALL MEMBERS SO THAT, IN THEIR FINAL LOCATION, LEVEL, PLUMBNESS AND ALIGNMENT ARE WITHIN THE TOLERANCES PRESCRIBED BY AISC CODE.

POST INSTALLED ANCHORS

1. ADHESIVE ANCHORAGES, WHERE SPECIFIED ON THE DRAWINGS, SHALL CONFORM TO THE FOLLOWING –
CONCRETE ADHESIVE ANCHORS:
HILTI HIT-RE 500-V3 ESR-3814
HILTI HIT-HY270

2. DRILLING SHALL BE PERFORMED WITH A ROTARY HAMMER DRILL AND CARBIDE TIPPED DRILL BIT IN ACCORDANCE WITH THE MANUFACTURER'S INSTRUCTIONS AND THE APPLICABLE ICC EVALUATION REPORT.

3. BORE HOLE CLEANING PROCEDURES MUST COMPLY WITH THE MANUFACTURER'S INSTRUCTIONS AND THE APPLICABLE ICC EVALUATION REPORT IN ORDER TO PRODUCE A DRY, DUST-FREE HOLE.

4. INJECTION OF ADHESIVE SHALL BE PERFORMED IN ACCORDANCE WITH MANUFACTURER'S INSTRUCTIONS AND THE APPLICABLE ICC EVALUATION REPORT IN ORDER TO PRODUCE AN AIR-VOID FREE INJECTION.

5. SPECIAL CONDITIONS SUCH AS WATER SATURATED CONCRETE, WATER-FILLED HOLES, UNDERWATER AND OVERHEAD INSTALLATIONS MUST BE APPROVED BY THE ENGINEER OF RECORD AND COMPLY WITH THE APPLICABLE ICC-ES REPORT.

6. STEEL ANCHORING ELEMENTS SHALL BE THE SIZE AND GRADE SHOWN ON THE DRAWINGS AND MUST BE CLEAN, DRY AND FREE OF ANY OIL OR CONTAMINANTS.

7. SUBSTITUTIONS FOR ANCHOR SYSTEMS MUST BE APPROVED BY THE STRUCTURAL ENGINEER OF RECORD PRIOR TO INSTALLATION AND SHALL HAVE A VALID ICC-ES EVALUATION IN ACCORDANCE WITH THE APPLICABLE BUILDING CODE.

8. ALL ANCHOR EMBED DEPTHS SPECIFIED ON THESE DRAWINGS ARE EFFECTIVE EMBEDMENT DEPTHS. ADDITIONAL ANCHOR LENGTH AND OR HOLE DEPTH SHALL BE PROVIDED AS REQUIRED BY THE ANCHOR MANUFACTURER AND ASSOCIATED CODE APPROVALS.

COLD-FORM STEEL FRAMING

1. ALL STEEL FRAMING SHALL CONFORM TO "THE SPECIFICATION FOR THE DESIGN OF COLD-FORMED STEEL STRUCTURAL MEMBERS", LATEST EDITION, BY THE AISI.

2. WELDED CONNECTIONS SHALL CONFORM TO "CODE FOR WELDING IN BUILDING CONSTRUCTION, D1.0" BY THE AWS.

3. ASTM A-568 STANDARD SPECIFICATION FOR GENERAL REQUIREMENTS FOR STEEL, CARBON AND HIGH STRENGTH LOW-ALLOY HOT ROLLED SHEET AND COLD ROLLED SHEET.

4. ALL STEEL FRAMING SHALL BE INSTALLED BY PERSONNEL EXPERIENCED IN LIGHT GAUGE STEEL FRAMING INSTALLATION.

5. WHERE STEEL FRAMING MEMBERS ARE COMPONENTS OF ASSEMBLIES INDICATED FOR A FIRE-RESISTANCE RATING, INCLUDING THOSE REQUIRED FOR COMPLIANCE WITH GOVERNING REGULATIONS, PROVIDE MEMBERS WHICH HAVE BEEN APPROVED BY GOVERNING AUTHORITIES HAVING JURISDICTION.

6. PROTECT LIGHT GAUGE STEEL FRAMING MEMBERS FROM RUSTING AND DAMAGE. DELIVER TO PROJECT SITE IN BUNDLES, FULLY IDENTIFIED WITH NAME, BRAND, TYPE AND GRADE. STORE OFF GROUND IN A DRY VENTILATED SPACE OR PROTECT WITH SUITABLE WATERPROOF COVERINGS.

7. WITH EACH TYPE OF STEEL FRAMING REQUIRED, PROVIDE MANUFACTURER'S STANDARD STEEL RUNNERS (TRACKS), BLOCKING, LINTELS, CLIP ANGLES, BRACING, REINFORCEMENTS, FASTENERS, AND ACCESSORIES AS RECOMMENDED BY MANUFACTURER FOR APPLICATIONS INDICATED, AS NEEDED TO PROVIDE A COMPLETE STEEL FRAMING SYSTEM.

8. FABRICATE METAL FRAMING COMPONENTS OF STRUCTURAL QUALITY SHEET STEEL WITH A MINIMUM YIELD POINT OF 50,000 PSI FOR STUDS, AND 33,000 PSI FOR RUNNERS; ASTM A653.

9. PROVIDE GALVANIZED FINISH TO METAL FRAMING COMPONENTS COMPLYING WITH ASTM A525 WITH A G60 COATING.

10. PROVIDE MANUFACTURER'S STANDARD STRUCTURAL "C" SHAPED STEEL STUDS OF SIZE, SHAPE, AND GAUGE INDICATED, WITH A NOMINAL 1-5/8" FLANGE AND MINIMUM 1/2" FLANGE RETURN LIP.

11. INSTALL CONTINUOUS TRACKS SIZED TO MATCH STUD DEPTH. ALIGN TRACKS ACCURATELY TO LAYOUT AT BASE AND TOPS OF STUDS. SECURE TRACKS PER DETAILS FOR TYPE OF CONSTRUCTION INVOLVED, EXCEPT DO NOT EXCEED 24" O.C. SPACING FOR NAIL OR POWDER-DRIVEN FASTENERS, OR 16" O.C., FOR OTHER TYPES OF ATTACHMENT. PROVIDE FASTENERS AT CORNERS AND ENDS OF TRACKS.

12. FRAME BOTH SIDES OF EXPANSION AND CONTROL JOINTS, AS SHOWN FOR THE WALL SYSTEM, WITH SEPARATE STUDS AND DO NOT BRIDGE THE JOINT WITH COMPONENTS OF THE STUD SYSTEM.

13. WHERE REQUIRED, TEMPORARY BRACING SHALL BE PROVIDED UNTIL ERECTION IS COMPLETED.

14. RESISTANCE TO BENDING AND ROTATION ABOUT THE MINOR AXIS SHALL BE PROVIDED BY MECHANICAL LATERAL BRACING WHERE REQUIRED.

15. ATTACHMENTS OF SIMILAR COMPONENTS SHALL BE DONE BY WELDING, SCREW ATTACHMENT, OR BOLTING. WIRE TYING OF FRAMING COMPONENTS SHALL NOT BE PERMITTED.

16. WELDING OF MEMBERS LIGHTER THAN 18 GAUGE SHALL NOT BE PERMITTED.

17. SPLICES SHALL NOT BE PERMITTED.

18. MINIMUM NUMBER OF EQUALLY SPACED HORIZONTAL WALL BRIDGING FOR THE HEIGHTS SHOWN:
UP TO 10' – 1 ROW
10' TO 14' – 2 ROWS
ABOVE 14' – AT 4' CENTERS

19. FULLY INSTALL ALL BRIDGING BEFORE APPLYING LOADS.

20. FOR WELDED CONNECTIONS, FUSION WELDING IS RECOMMENDED WITH A DIRECT CURRENT WELDER OF 200 OR MORE AMPERE CAPACITY. USE A HEAT OF 60 TO 90 AMPERES (DEPENDING ON THE GAUGE OF METAL) ALONG WITH ASTM E60 ELECTRODES.

21. CONTRACTOR TO SUBMIT THE FOLLOWING:
A) SUBMIT CERTIFICATION OF MATERIALS FROM THE MANUFACTURER TO SHOW COMPLIANCE WITH THESE SPECIFICATIONS AND RELATED DRAWINGS.

22. SUBMITTED SHOP DRAWINGS MUST BE CHECKED AND SIGNED BY THE GENERAL CONTRACTOR.

CARPENTRY

1. DIMENSIONED LUMBER SHALL BE DRESSED S4S, AND SHALL BEAR THE GRADE STAMP OF THE MANUFACTURER'S ASSOCIATION.

2. ALL LUMBER SHALL BE SOUND, SEASONED, AND FREE FROM WARP.

3. ALL LUMBER SHALL BE SOUTHERN PINE NO. 2 GRADE OR BETTER; WITH 19% MAXIMUM MOISTURE CONTENT, U.N.O. ON THE PLANS.

4. ALL LUMBER IN CONTACT WITH MASONRY OR CONCRETE SHALL BE PRESSURE TREATED.

5. PRESSURE TREATED LUMBER SHALL BE IMPREGNATED WITH A CCA SALT TREATMENT IN ACCORDANCE WITH F.S. TT-W-571 AND BEAR THE AMERICAN WOOD PRESERVERS INSTITUTE QUALITY MARK LP-2.

6. PLYWOOD WALL AND ROOF SHEATHING SHALL BE APA RATED SHEATHING, EXPOSURE 1 DURABILITY CLASSIFICATION.

7. ROOF SHEATHING TO BE INSTALLED WITH ONE PLYWOOD CLIP PER SPAN BETWEEN PANEL EDGES UNLESS NOTED OTHERWISE. FOR PANEL WIDTHS LESS THAN 24" WIDE, INSTALL SOLID 2X BLOCKING AT EACH PANEL EDGE. INSTALL SOLID 2X BLOCKING BETWEEN SUPPORTS AT ALL HIPS, RIDGES, VALLEYS, AND CHANGES IN ROOF SLOPE.

8. ALL NAILING AND BOLTING SHALL COMPLY WITH AMERICAN INSTITUTE OF TIMBER CONSTRUCTION REQUIREMENTS.

9. ALL CONNECTION HARDWARE SHALL BE GALVANIZED AND SUPPLIED BY SIMPSON STRONG-TIE CO. OR EQUIVALENT. SUBMIT CUT SHEETS FOR ALL CONNECTION HARDWARE TO ENGINEER FOR APPROVAL.

10. ALL CONNECTION HARDWARE IS TO BE FULLY FASTENED PER MANUFACTURERS REQUIREMENTS UNLESS NOTED OTHERWISE.

PRE-ENGINEERED WOOD TRUSSES

1. THIS SECTION DEFINES PRE-ENGINEERED, PREFABRICATED, METAL PLATE CONNECTED WOOD ROOF TRUSSES AS "WOOD TRUSSES".

2. WOOD TRUSSES SHALL BE DESIGNED AND FABRICATED IN ACCORDANCE WITH THE "NATIONAL DESIGN SPECIFICATION FOR WOOD CONSTRUCTION" 1991 EDITION, PUBLISHED BY THE NATIONAL FOREST PRODUCTS ASSOCIATION, "NATIONAL DESIGN STANDARD FOR METAL PLATE CONNECTED WOOD TRUSS CONSTRUCTION, TPI 1-95", PUBLISHED BY THE TRUSS PLATE INSTITUTE; AND THE APPLICABLE BUILDING CODE LISTED IN THE MISCELLANEOUS SECTION OF THESE SPECIFICATIONS.

3. THE WOOD TRUSS MANUFACTURER MUST PARTICIPATE IN A CODE APPROVED THIRD PARTY QUALITY ASSURANCE PROGRAM SUCH AS THE TRUSS PLATE INSTITUTE'S "QUALITY CONTROL INSPECTION PROGRAM" OR EQUIVALENT.

4. WOOD TRUSS MEMBERS AND CONNECTIONS SHALL BE DESIGNED FOR ALL LOADS SHOWN ON THE CONTRACT DOCUMENTS INCLUDING; LIVE, DEAD, AND CONCENTRATED LOADS, PLUS WIND LOADS IN ACCORDANCE WITH THE APLICABLE BUILDING CODE.
A) MINIMUM SUPERIMPOSED DEAD LOADS:
1. TOP CHORD . . . . 15 PSF
2. BOTTOM CHORD . . . . 10 PSF

B) MINIMUM NET UPLIFT: REFER TO SCHEDULE ON S0.1

5. DURATION OF LOAD FACTORS:
ROOF DL+LL+WL 1.33
ROOF DL+LL 1.25

6. WOOD TRUSS DESIGN SHOP DRAWINGS SHALL INCLUDE, BUT ARE NOT LIMITED TO, THE FOLLOWING INFORMATION:
A) SPAN LENGTH, OVERHANG AND EAVE DIMENSIONS, SLOPE AND SPACING OF THE WOOD TRUSSES.
B) ALL DESIGN LOADS AND THEIR POINTS OF APPLICATION, VALLEY AND CONVENTIONAL FRAMING MUST BE CONSIDERED.
C) ADJUSTMENTS TO ALLOWABLE VALUES. (DURATION OF LOAD FACTORS, ETC.
D) REACTIVE FORCES AND THEIR LOCATIONS.
E) BEARING TYPE AND MINIMUM BEARING LENGTH.
F) DEFLECTIONS, SPAN AND REACTION.
G) METAL CONNECTOR PLATE TYPE, GAUGE, SIZE, AND LOCATION.
H) LUMBER SIZE, SPECIES, GRADE AND MOISTURE CONTENT.
I) LOCATION AND CONNECTION DESIGN OF REQUIRED CONTINUOUS LATERAL BRACING.
J) TRUSS SPLICES MUST BE DETAILED. THIS INCLUDES "PIGGY BACK" TRUSSES.
K) CONNECTION DETAILS: TRUSS TO BEARING, TRUSS TO TRUSS, TRUSS TO TRUSS GIRDER, PIGGY BACK TO TRUSS, ETC.
L) BRACING: NOTE MINIMUM BOTTOM CHORD BRACING AND CROSS BRACING REQUIREMENTS BELOW.

7. DEFLECTIONS: (UNLESS NOTED OTHERWISE)
A) SPAN LIVE LOAD: LESS THAN OR EQUAL TO SPAN/360.
B) SPAN TOTAL LOAD: LESS THAN OR EQUAL TO SPAN /240.

8. FIRE RETARDANT WOOD IS NOT ALLOWABLE.

9. SUPPORTS: WOOD TRUSSES SHALL BE DESIGNED WITH AT LEAST ONE HORIZONTAL ROLLER CONNECTION PER SPAN SO THAT NO HORIZONTAL REACTIONS ARE INDUCED ON SUPPORTS UNDER DEAD OR LIVE LOADS.

10. WOOD TRUSSES MUST BE CHECKED FOR WIND, WIND VELOCITY, DESIGN VELOCITY PRESSURES, AND TYPE OF STRUCTURE FOR WIND, MUST BE SHOWN ON THE SUBMITTED SHOP DRAWINGS

11. CONTINUOUS BOTTOM CHORD LATERAL BRACING IS REQUIRED AT A MAXIMUM SPACING OF 10' O.C. UNLESS NOTED OTHERWISE. BOTTOM CHORD BRACING IS CONTINUOUS FROM ONE END OF THE BUILDING TO OTHER END. OVERLAP CONTINUOUS BRACING AT LEAST ONE TRUSS SPACE. USE A MINIMUM OF 2 X 4 GRADE MARKED LUMBER AT LEAST 10' LONG, WITH 2-16D NAILS AT INTERMEDIATE AND 3-16D NAILS AT END CONNECTIONS.

12. CROSS BRACING IS REQUIRED AT CONTINUOUS LATERAL BRACING UNLESS NOTED OTHERWISE. LOCATE CROSS BRACING AT OR NEAR THE BOTTOM CHORD BRACING. INSTALL CROSS BRACING AT EACH END AND AT 20' O.C. ALONG THE LENGTH OF THE LATERAL BRACING. CROSS BRACING IS ACCOMPLISHED BY ATTACHING DIAGONAL WEB BRACING TO OPPOSITE SIDES OF THE SAME GROUP OF SIMILAR WEB MEMBERS. SLOPE CROSS BRACING IN OPPOSITE DIRECTIONS AT APPROXIMATELY 45 DEGREES FORMING A CROSS "X". USE A MINIMUM OF 2 X 4 GRADE MARKED LUMBER WITH AT LEAST 2-16D NAILS AT EACH CONNECTION.

13. TRUSS ERECTOR IS RESPONSIBLE FOR ALL TEMPORARY BRACING OF TRUSS SYSTEM DURING CONSTRUCTION.

14. HANDLING, INSTALLATION, AND BRACING OF WOOD TRUSSES SHALL BE IN ACCORDANCE WITH "TPI 1-95", PUBLISHED BY THE TRUSS PLATE INSTITUTE.

15. ALL WOOD TRUSSES SHALL BE FASTENED TO THEIR SUPPORTS WITH APPROVED HURRICANE CLIPS OR STRAPS.

16. CONTRACTOR SHALL ORDER AND INSTALL HURRICANE CLIPS OR STRAPS FOR THE UPLIFT AND LATERAL FORCES SHOWN ON THE SUBMITTED WOOD TRUSS DESIGN CALCULATIONS.

17. ALL CONNECTION HARDWARE SHALL BE GALVANIZED AND SUPPLIED BY SIMPSON STRONG-TIE CO. OR BY APPROVED EQUIVALENT MANUFACTURER.

18. ALL CONNECTION HARDWARE IS TO BE FULLY FASTENED PER MANUFACTURER'S REQUIREMENTS WITH MAXIMUM NUMBER AND SIZE NAILS OR BOLTS UNLESS NOTED OTHERWISE.

19. PILING OF PLYWOOD ON WOOD TRUSSES IS NOT ALLOWED.

20. INSTALLATION OF BROKEN, DAMAGED, WARPED, OR IMPROPERLY REPAIRED WOOD TRUSSES IS NOT ALLOWED.

21. IMPROPER OR UNAUTHORIZED FIELD ALTERATIONS OF WOOD TRUSSES IS NOT ALLOWED.

22. ALL CONNECTIONS AND BRACING MUST BE INSTALLED BEFORE SHEATHING THE ROOF.

23. WOOD TRUSS DESIGN ENGINEER MUST BE PROVIDED WITH A COPY OF THESE DRAWINGS AND SPECIFICATIONS.

24. SUBMITTALS: ALL SUBMITTALS SHALL BEAR THE EMBOSSED SEAL OF A LICENSED FLORIDA ENGINEER AND SHALL BE SUBMITTED FOR REVIEW BY THE STRUCTURAL ENGINEER PRIOR TO WOOD TRUSS FABRICATION.
A) SUBMIT SEALED WOOD TRUSS DESIGN CALCULATIONS AND PROFILES FOR EACH TYPE OF TRUSS,WITH PERMANENT BRIDGING REQUIREMENTS.
B) SUBMIT WOOD TRUSS ERECTION PLAN, INCLUDING CONNECTION DETAILS.
C) SUBMIT WOOD TRUSS TEMPORARY ERECTION BRACING PLAN.

SHEET INDEX

SHEET NUMBER	SHEET TITLE
S001	STRUCTURAL NOTES
S100	FOUNDATION PLAN
S200	ROOF FRAMING PLAN
S300	WALL SECTIONS
S301	STEEL ELEVATIONS AND DETAILS
S400	SECTIONS AND DETAILS
S401	SECTIONS AND DETAILS

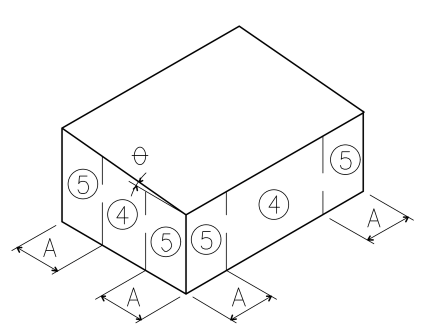

WALL PRESSURE ZONES
(ISOMETRIC VIEW)

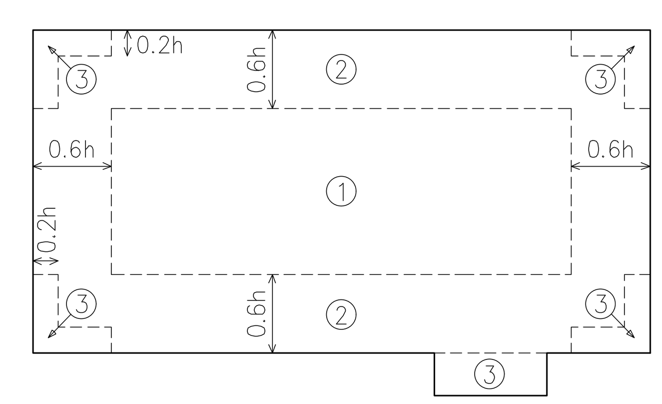

ROOF PRESSURE ZONES
(PLAN VIEW)

1 DESIGN WIND CRITERIA (ASD VALUES)
NOT TO SCALE

BUILDING DATA

ULTIMATE WIND SPEED (mph): (FIGURE 1609)	140		INTERNAL PRESSURE COEFFICIENT: (Enclosed Building per ASCE 7-22)	+/- 0.18
WIND LOAD FACTOR:	0.6		WIND EXPOSURE CATEGORY:	B
RISK CATEGORY: (TABLE 1604.5)	II		WIDTH OF WALL EDGE STRIP (A):	3.5
ROOF ANGLE (θ): (Degrees)	A<7.0		DEAD LOAD RESISTING UPLIFT (0.6D in psf):	10.0
MEAN ROOF HEIGHT (h):	16'-0"		EDGE DISTANCE (0.6h) 0.6 X MEAN ROOF HEIGHT (Feet)	9.6
			EDGE DISTANCE (0.2h) 0.2 X MEAN ROOF HEIGHT (Feet)	3.2

DESIGN WIND LOADS – COMPONENTS & CLADDING (Values per ASD)

ROOF					WALL			
ZONE	AREA (sf)	DESIGN PRESSURE (psf) Positive	Negative	Net Uplift	ZONE	AREA (sf)	DESIGN PRESSURE (psf) Positive	Negative
1	10.0	10.00	−27.62	−17.62	4	10.0	15.87	−17.19
1	50.0	10.00	−23.39	−13.39	4	50.0	14.23	−15.56
1	100.0	10.00	−21.57	−11.57	4	100.0	13.53	−14.85
2	10.0	15.87	−36.43	−26.43	5	10.0	15.87	−21.16
2	50.0	14.23	−30.99	−20.99	5	50.0	14.23	−17.89
2	100.0	13.53	−28.65	−18.65	5	100.0	13.53	−16.49
3	10.0	15.87	−36.43	−26.43				
3	50.0	14.23	−30.99	−20.99	4P	10.0	37.00	
3	100.0	13.53	−28.65	−18.65	5P	10.0	37.00	

NOTES:
1. FOR EFFECTIVE AREAS BETWEEN THOSE GIVEN ABOVE THE LOAD MAY BE INTERPOLATED, OTHERWISE USE THE LOAD ASSOCIATED WITH THE LOWER EFFECTIVE AREA.
2. PLUS AND MINUS SIGNS SIGNIFY PRESSURES ACTING TOWARD AND AWAY FROM THE BUILDING SURFACES, RESPECTIVELY.
3. SEE PRESSURE ZONE DIAGRAMS FOR CORRESPONDING ZONES.
4. EXTERIOR GLAZING OPENINGS IN BUILDINGS SHALL COMPLY WITH FLORIDA BUILDING CODE 8TH EDITION (2023) BY EITHER BEING DESIGNED FOR IMPACT RESISTANCE OR BEING PROTECTED BY IMPACT PROTECTIVE SYSTEMS WHEN ULTIMATE WIND SPEED IS 140 MPH OR MORE.

ACG PROFESSIONAL ENGINEERING, INC.
16912 Melissa Ann Dr . Lutz, FL . 33558
Ph: 813.963.1906 STRUCTURAL
Alan C. Guenther, P.E. #53308 / C.A. #26813

PLOT DATE: 8.29.2025

FWH Architects
3336 Grand Blvd. Suite 201
Holiday, Florida 34690
Ph. 727. 815. 3336
FABER@FWHARCHITECTS.COM

brightwork real estate
3708 WEST SWANN AVE,
SUITE 200
TAMPA, FL 33609
PHONE: 813.874.1700

ALAN C. GUENTHER, P.E.
FL PE #53308

no.	date	revision descriptions

CHIPOTLE MEXICAN GRILL
BUILDING SHELL

NOLTE RD. AND KYRST RUN
ST. CLOUD, FLORIDA

08.29.2025
date

25008
comm. no.

STRUCTURAL NOTES

S001

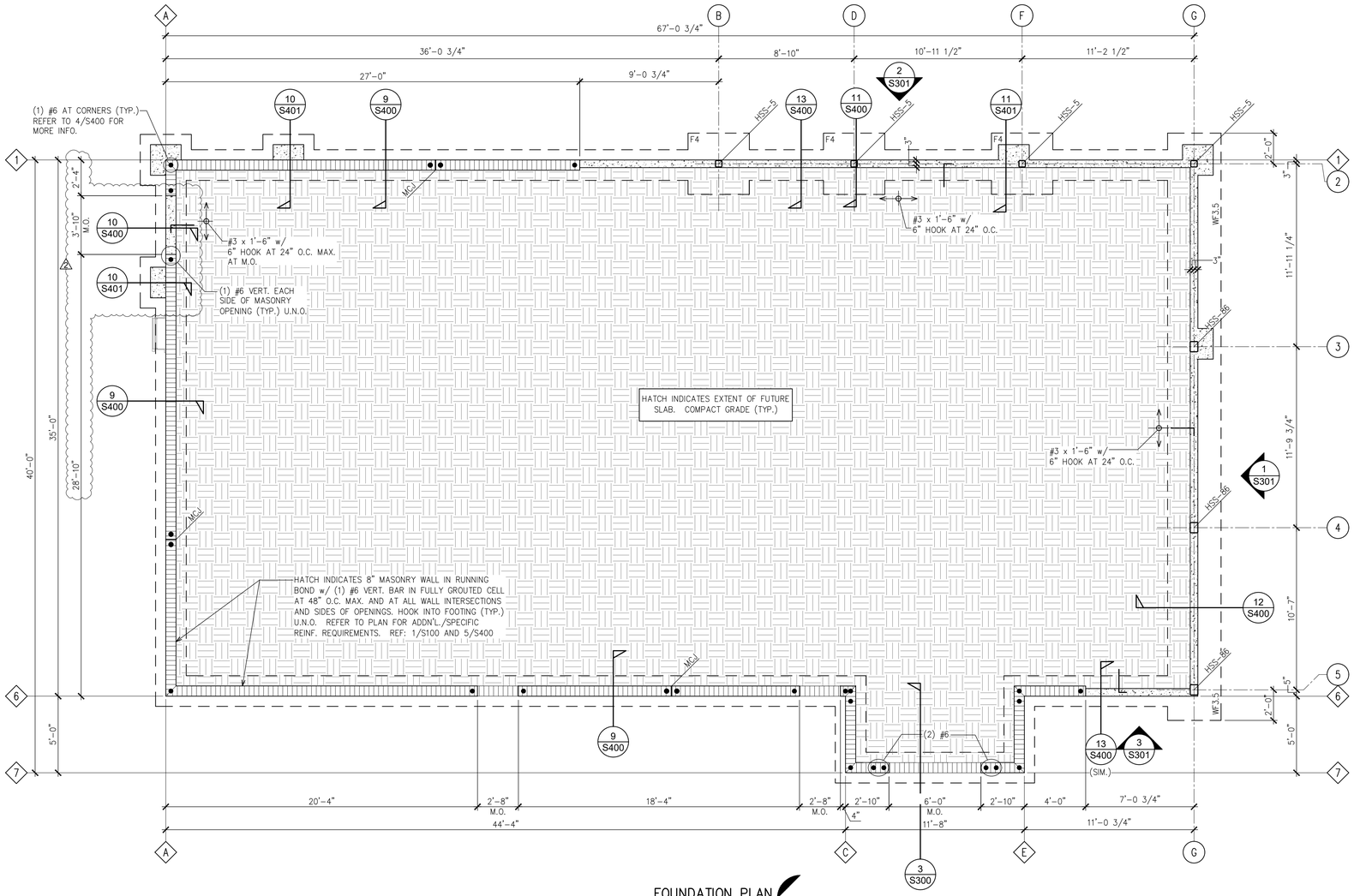

FOUNDATION PLAN

SCALE: 1/4" = 1'-0"

NORTH

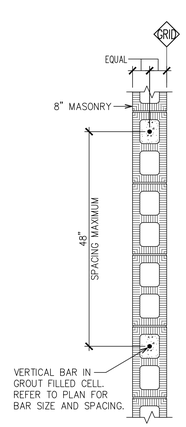

1 MASONRY REINFORCING

SCALE: 3/4" = 1'-0" (PLAN VIEW)

FOOTING SCHEDULE

MARK	SIZE	DEPTH	REINFORCING	COMMENTS
WF2	2'-0" WIDE X CONT.	1'-0"	(3) #5 CONT. W/ #5 TRANSV. AT 24" O.C. BOTTOM	WALL FOOTING
WF3.5	3'-6" X CONT.	1'-6"	(5) #5 CONT. W/ #5 TRANSV. AT 12" O.C. TOP AND BOTTOM	COMBINED COLUMN FOOTING
F4	4'-0" X 4'-0"	1'-0"	(4) #5 EACH WAY, TOP AND BOTTOM	COLUMN FOOTING

STEEL COLUMN SCHEDULE

MARK	COLUMN SIZE	BASE PLATE	BASE PLATE TYPE	COMMENTS
HSS-5	HSS 5 X 5 X 3/8	3/4 X 12 X 12	TYPE A	(4) 3/4"ø X 12" F1554-GR36 ANCHOR BOLTS
HSS-86	HSS 8 X 6 X 3/8	1 X 12 X 15	TYPE B	(6) 3/4"ø X 16" F1554-GR36 ANCHOR BOLTS

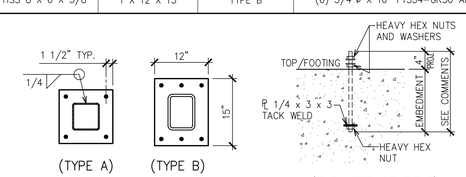

(TYPE A) (TYPE B) (TYP. ANCHOR BOLT)

FOUNDATION PLAN NOTES:

1. FUTURE SLAB-ON-GRADE TO BE 4" THICK (3,000 PSI) WITH 6x6 – W1.4xW1.4 W.W.F. ON 10 MIL VAPOR RETARDER OVER COMPACTED AND TERMITE TREATED SOIL. SLAB TO BE LEVEL (1/64" PER FOOT OR LESS), SMOOTH, CLEAN AND WITH SEALED CONTROL JOINTS. INSTALL FUTURE SLAB CONTROL JOINTS AT ≤15'-0" O.C. EACH WAY. JOINT PATTERN SHALL BE APPROXIMATELY SQUARE, AND LIMITED TO AN AREA NOT EXCEEDING 255 SQUARE FEET. REFER TO 10/S301 FOR CONTROL JOINT DETAIL.
2. TOP OF SLAB ELEVATION = 0'-0" U.N.O.
   TOP OF EXTERIOR FOOTING ELEVATION = (–) 1'-4" U.N.O.
3. CENTER ALL FOOTINGS BELOW WALL OR COLUMN U.N.O.
4. ALL FOOTING REINFORCING TO BE BOTTOM BARS U.N.O.
5. REFER TO ARCHITECTURAL/CIVIL FOR EXTERIOR SLAB AND SIDEWALK INFORMATION.
6. REFER TO ARCHITECTURAL/PLUMBING DRAWINGS FOR FIXTURE/DRAIN LOCATIONS AND REQUIREMENTS.
7. REFER TO THIS PLAN FOR MASONRY CONTROL JOINT (M.C.J.) LOCATIONS. REFER TO 3/S400 FOR MASONRY CONTROL JOINT DETAIL.
8. ALL WALL FOOTINGS TO BE TYPE "WF2" U.N.O.
9. REFER TO 7/S400 FOR PIPE PENETRATION DETAIL.
10. PROVIDE CORNER BARS AT ALL CORNERS AND INTERSECTIONS OF CONTINUOUS FOOTINGS. REFER TO DETAIL 2/S400 FOR MORE INFO.
11. REFER TO CIVIL DRAWINGS FOR BUILDING LOCATION AND BUILDING ORIENTATION ON THE SITE.
12. REFER TO 1/S001 FOR DESIGN WIND CRITERIA.

ACG PROFESSIONAL ENGINEERING, INC.
16912 Melissa Ann Dr . Lutz, FL . 33558
Ph: 813.963.1904 STRUCTURAL
Alan C. Guenther, P.E. #53308 / C.A. #26813

PLOT DATE: 11.25.2025

FWH Architects
3336 Grand Blvd. Suite 201
Holiday, Florida 34690
Ph. 727. 815. 3336
FABER@FWHARCHITECTS.COM

brightwork real estate
3708 WEST SWANN AVE,
SUITE 200
TAMPA, FL 33609
PHONE: 813.874.1700

ALAN C. GUENTHER, P.E.
FL PE #53308

no.	date	revision descriptions
1	12.02.2025	REVISED PER COORDINATION W/ TENANT INTERIORS

CHIPOTLE MEXICAN GRILL
BUILDING SHELL

NOLTE RD. AND KYRST RUN
ST. CLOUD, FLORIDA

08.29.2025
date

25008
comm. no.

FOUNDATION PLAN

S100

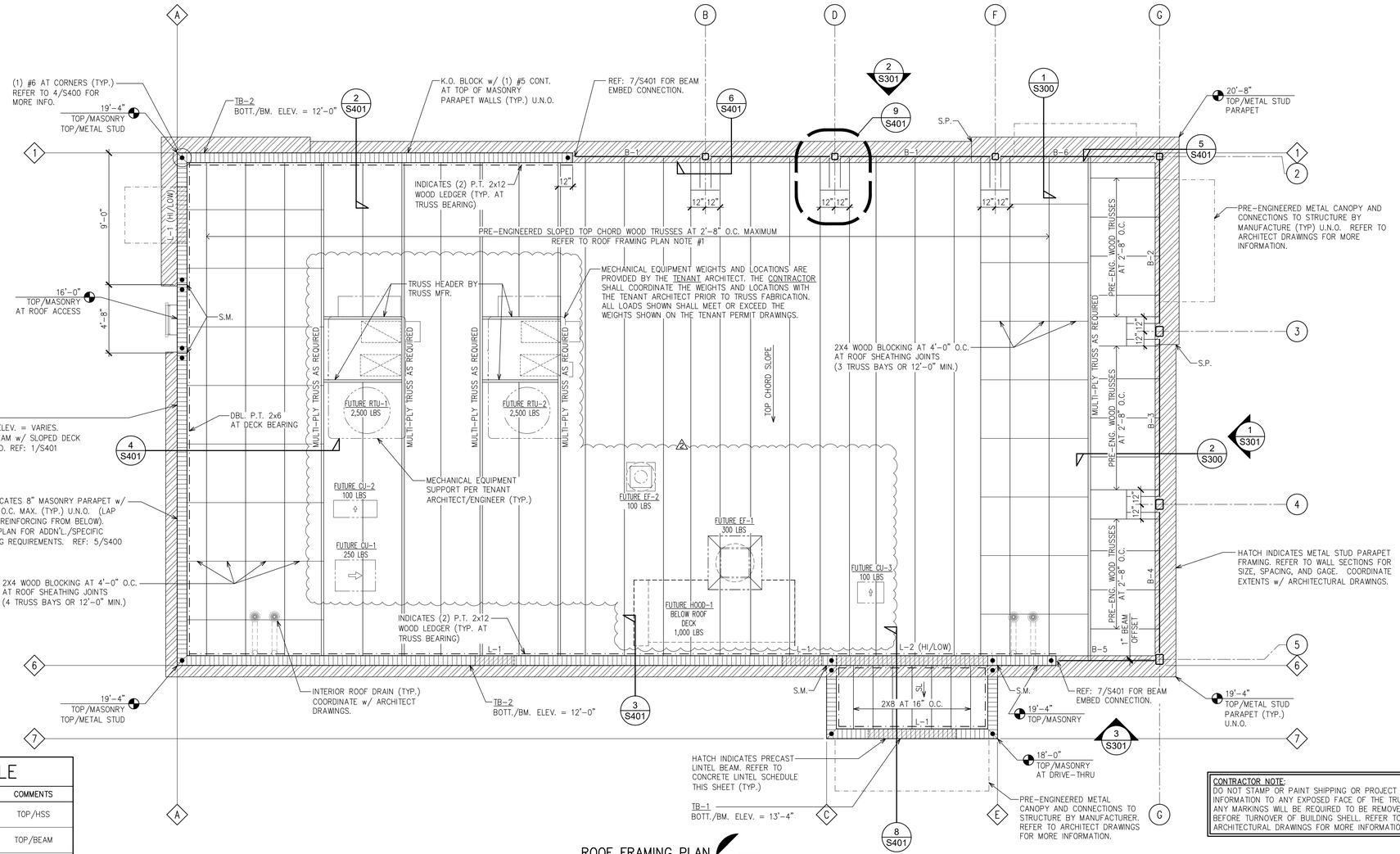

ROOF FRAMING PLAN

SCALE: 1/4" = 1'-0"

NORTH

CONTRACTOR NOTE:
DO NOT STAMP OR PAINT SHIPPING OR PROJECT INFORMATION TO ANY EXPOSED FACE OF THE TRUSSES. ANY MARKINGS WILL BE REQUIRED TO BE REMOVED BEFORE TURNOVER OF BUILDING SHELL. REFER TO ARCHITECTURAL DRAWINGS FOR MORE INFORMATION.

STEEL BEAM SCHEDULE

MARK	SIZE	TOP/STEEL ELEVATION	COMMENTS
B-1	HSS 4X2X1/4 (LSH)	18'-10"	TOP/HSS
	W 10X22	13'-6 7/8"	TOP/BEAM
	HSS 6X4X1/4 (LSV)	10'-6"	TOP/HSS
B-2	HSS 4X2X1/4 (LSH)	20'-2"	TOP/HSS
	W 10X22	13'-6 7/8 (HI) 13'-3 9/16" (LO)	TOP/BEAM
	HSS 6X4X1/4 (LSV)	10'-6"	TOP/HSS
	HSS 6X6X3/8	7'-8"	TOP/HSS
B-3	HSS 4X2X1/4 (LSH)	18'-10"	TOP/HSS
	W 10X22	13'-3 9/16" (HI) 13'-0 3/8" (LO)	TOP/BEAM
	HSS 6X4X1/4 (LSV)	10'-6"	TOP/HSS
B-4	HSS 4X2X1/4 (LSH)	18'-10"	TOP/HSS
	W 10X22	13'-0 3/8" (HI) 12'-9 3/4" (LO)	TOP/BEAM
	HSS 6X4X1/4 (LSV)	10'-6"	TOP/HSS
B-5	HSS 4X2X1/4 (LSH)	18'-10"	TOP/HSS
	W 10X22	12'-9 3/4"	JOIST BEARING
	HSS 6X4X1/4 (LSV)	10'-6"	TOP/HSS
B-6	HSS 4X2X1/4 (LSH)	20'-2"	TOP/HSS
	W 10X22	13'-6 7/8"	TOP/BEAM
	HSS 6X4X1/4 (LSV)	10'-6"	TOP/HSS
	HSS 6X6X3/8	7'-8"	TOP/HSS

TIE BEAM SCHEDULE

MARK	SIZE	REINFORCING BARS	COMMENTS
TB-1	8" X 16"	(1) #5 CONT. EACH COURSE	TYPE A
TB-2	8" X 32"	(1) #5 CONT. EACH COURSE	TYPE B

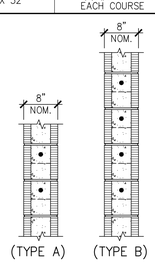

1. ALL KNOCK-OUT BLOCK COURSES TO BE GROUTED SOLID.

CONCRETE LINTEL SCHEDULE

MARK	SIZE	REINFORCING BARS	COMMENTS
L-1	8" X 8"	(1) #5 CONT.	TYPE A
L-2	8" X 16"	(2) #5 CONT.	TYPE B

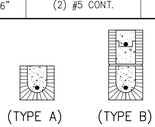

NOTES:

1. REFER TO 6/S400 FOR ADDITIONAL PRECAST LINTEL REQUIREMENTS.
2. ALL LINTELS AND KNOCK-OUT BLOCKS TO BE GROUTED SOLID.

TRUSS MANUFACTURER NOTES

1. TRUSS TOP CHORDS TO BE 2x4 MINIMUM.
2. ALL TRUSS-TO-TRUSS CONNECTIONS TO BE DESIGNED/SUPPLIED BY TRUSS MFR. SUBMIT CUT SHEETS OF CONNECTION HARDWARE FOR STRUCTURAL REVIEW.
3. ALL TRUSS ENGINEERING, PLACEMENT, DIMENSIONS, SIZE OF MEMBERS AND CONNECTIONS TO BE VERIFIED BY TRUSS MANUFACTURER.
4. IF TRUSS LAYOUT DIFFERS FROM THAT REPRESENTED ABOVE, PROVIDE ARCHITECT WITH REVISED LAYOUT FOR SUPERSTRUCTURE REDESIGN.
5. ALL MECHANICAL DUCT WORK WITHIN THE TRUSSES SHALL BE COORDINATED BY THE CONTRACTOR AND THE TRUSS MANUFACTURER PRIOR TO FABRICATION OF THE TRUSSES.
6. REFER TO ARCHITECTURAL REFLECTED CEILING PLAN FOR EXTENT OF SUSPENDED CEILING BELOW TRUSS BOTTOM CHORDS TYPICAL (NO RIGID CEILING AT TRUSS BOTTOM CHORDS). TRUSS MANUFACTURER TO SPECIFY BOTTOM CHORD TRUSS BRACING MEMBERS, LOCATIONS, AND CONNECTIONS AS REQUIRED.
7. AT BOTTOM CHORDS WITH NO RIGID CEILING, MINIMUM BOTTOM CHORD BRACING TO BE CONT. 1x4 AT 3'-4" O.C. MAX. AND CONT. 2x4 AT 10'-0" O.C. MAX. (w/ X-BRACING AT 20'-0" O.C. MAX.).

ROOF FRAMING PLAN NOTES:

1. ROOF FRAMING TO BE PRE-ENGINEERED 24" DEEP (MINIMUM) WOOD TRUSSES AT 2'-8" O.C. MAXIMUM WITH A SLOPING TOP CHORD AND SHALL BE DESIGNED BY A DELEGATED ENGINEER AND FABRICATED PER APPLICABLE LOADS BY TRUSS MANUFACTURER.
2. CONTRACTOR/ERECTOR IS RESPONSIBLE FOR ALL TEMPORARY BRACING.
3. TRUSS TOP CHORD SLOPE = 1/4" PER FOOT (MIN.) U.N.O.
4. ROOF SHEATHING SHALL BE 5/8" EXPOSURE 1 APA RATED 40/20 C-D. REFER TO 9/S301 FOR ROOF SHEATHING FASTENING PATTERN.
5. BOTTOM OF TRUSS ELEVATION = 12'-0".
6. CONTRACTOR TO COORDINATE SIZE, WEIGHT, AND LOCATION OF MECHANICAL EQUIPMENT AND PENETRATIONS WITH MECHANICAL TENANT EQUIPMENT DRAWINGS AND TENANT ARCHITECT (UNDER SEPARATE PERMIT) PRIOR TO JOIST FABRICATION.
7. MECHANICAL CONTRACTOR SHALL VERIFY THAT WEIGHT OF ACTUAL EQUIPMENT INSTALLED DOES NOT EXCEED MAXIMUM OPERATING WEIGHT OF EQUIPMENT SHOWN ON PLAN.
8. MECHANICAL UNIT CURB SUPPORTS AND ROOF DECK OPENING SUPPORT FRAMES ARE PER THE TENANT ARCHITECT DRAWINGS AND DESIGNED BY A DELEGATED ENGINEER (UNDER SEPARATE PERMIT).
9. _____ INDICATES MODEL NUMBER OF STEEL CONNECTION HARDWARE BY SIMPSON STRONG-TIE CO., OR EQUIVALENT U.N.O. ALL CONNECTORS TO BE FULLY NAILED. CONTRACTOR TO VERIFY NET WIND UPLIFT REACTIONS FROM TRUSS MFR. WITH SPECIFIED CONNECTORS AND REPORT ANY DISCREPANCIES TO ARCHITECT/ENGINEER.
10. S.M. = INDICATES STEP TOP/MASONRY PARAPET.
11. S.P. = INDICATES STEP TOP/METAL STUD PARAPET.
12. REFER TO 1/S001 FOR DESIGN WIND CRITERIA.

FWH Architects
3336 Grand Blvd. Suite 201
Holiday, Florida 34690
Ph. 727. 815. 3336
FABER@FWHARCHITECTS.COM

brightwork real estate
3708 WEST SWANN AVE, SUITE 200
TAMPA, FL 33609
PHONE: 813.874.1700

ALAN C. GUENTHER, P.E.
FL PE #53308

ACG PROFESSIONAL ENGINEERING, INC.
16912 Melissa Ann Dr , Lutz, FL , 33558
Ph: 813.963.1906 STRUCTURAL
Alan C. Guenther, P.E. #53308 / C.A. #26813

no.	date	revision descriptions
2	12.02.2025	REVISED PER COORDINATION W/ TENANT INTERIORS

CHIPOTLE MEXICAN GRILL BUILDING SHELL

NOLTE RD. AND KYRST RUN
ST. CLOUD, FLORIDA

08.29.2025
date

25008
comm. no.

ROOF FRAMING PLAN

S200

PLOT DATE: 11.25.2025

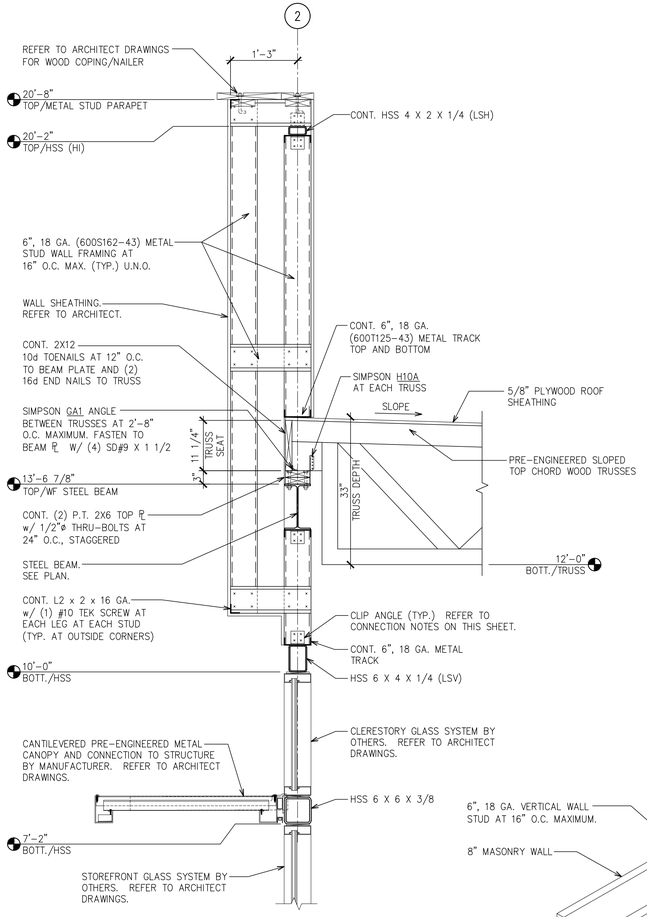

1 WALL SECTION
SCALE: 3/4" = 1'-0"

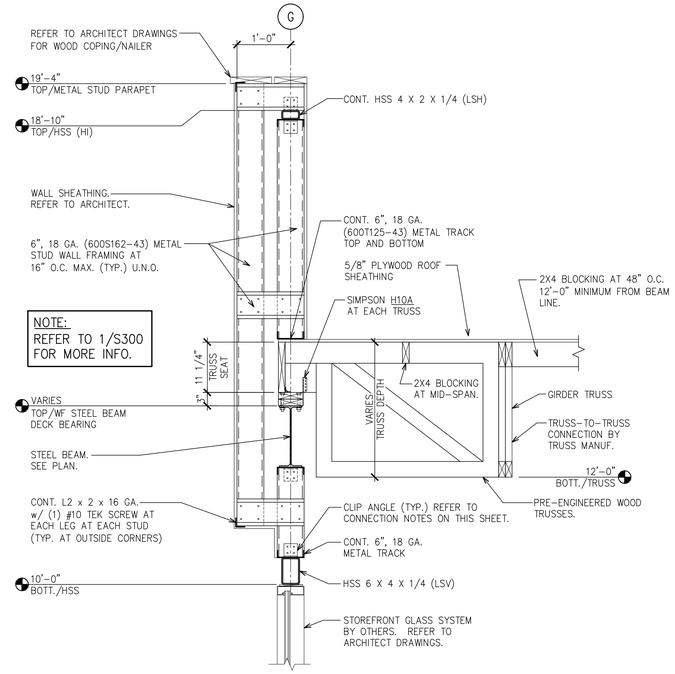

2 WALL SECTION
SCALE: 3/4" = 1'-0"

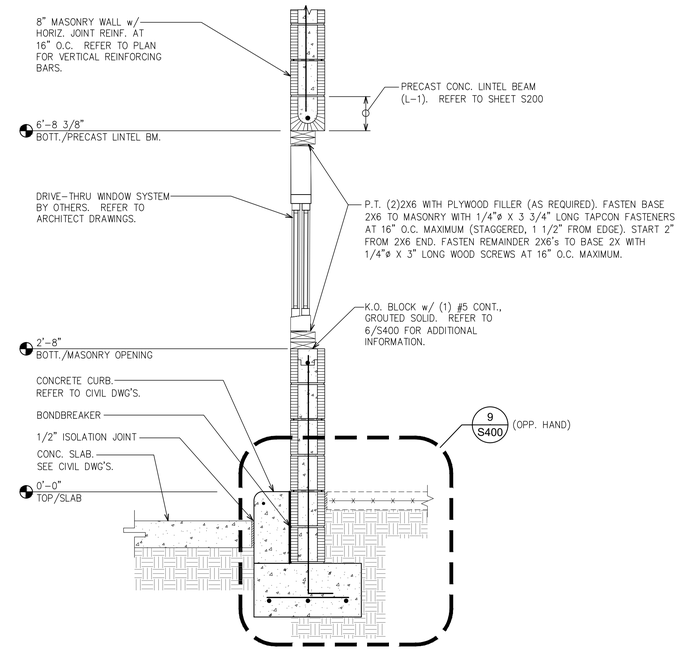

3 WALL SECTION
SCALE: 3/4" = 1'-0"

LIGHT GAUGE FRAMING CONNECTIONS:

1. CLIP ANGLE (MINIMUM): 16 GA. L 3 x 2 x 0-4
2. METAL STUDS AND/OR CLIP ANGLES SHALL BE CONNECTED TO STRUCTURAL STEEL (3/16" MIN. THICKNESS) WITH (4) 0.157"ø HILTI X-U 16 POWDER ACTUATED FASTENERS (PAF).
3. METAL STUDS AND/OR CLIP ANGLES SHALL BE CONNECTED TO METAL STUDS WITH MINIMUM (4) #10 TEK SCREWS.
4. METAL TRACK/RUNNER SHALL BE CONNECTED TO METAL STUD WITH (1) #10 TEK SCREW AT EACH FLANGE (2 SCREWS TOTAL PER STUD).
5. CONTINUOUS METAL STUD TRACKS SHALL BE CONNECTED TO STRUCTURAL STEEL WITH (2) 0.157"ø HILTI X-U 16 POWDER ACTUATED FASTENERS AT 12" O.C. MINIMUM.
6. CONTINUOUS TRACKS SHALL BE FASTENED TO CONCRETE AND/OR MASONRY WITH (1) 1/4"ø x 1 3/4" TAPCON FASTENERS AT 16" O.C.
7. CLIP ANGLES SHALL BE FASTENED TO CONCRETE/MASONRY WITH (2) 1/4"ø x 1 3/4" TAPCON FASTENERS.
8. CONNECT PLYWOOD SHEATHING TO METAL STUDS WITH #10 TEK FLATHEAD SCREWS AT 6" O.C. AT PANEL EDGES AND AT 8" O.C. AT INTERIOR SUPPORTS.
9. CONNECT 5/8" THICK DENSGLASS SHEATHING TO METAL STUDS WITH #6 1-1/4" BUGLE HEAD (FINE THREAD) SCREWS AT 6" O.C. AT PANEL EDGES AND AT 6" O.C. AT INTERIOR SUPPORTS (MINIMUM).
10. AS REQUIRED, THE CONTRACTOR SHALL PROVIDE CLIP ANGLES FOR ALL METAL STUDS SO PROPER ALIGNMENT CAN BE ATTAINED. SEE FASTENING REQUIREMENTS ABOVE.

LIGHT GAUGE FRAMING NOTES:

A. THE LIGHT GAUGE MEMBER SIZES INDICATED ON THE DRAWINGS ARE A MINIMUM DEPTH AND GAUGE REQUIRED TO MEET THE DESIGN INTENT AND ARE BASED ON THE PROPERTIES AND MATERIALS OF THE STEEL STUD MANUFACTURERS ASSOCIATION (SSMA) STANDARDS. ANY MANUFACTURER WHOSE PRODUCT GEOMETRIES MEETS OR EXCEED THE SSMA STANDARDS ARE ACCEPTABLE.

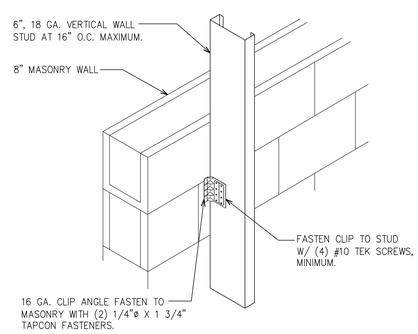

4 BRACING STUD DETAIL
N.T.S.

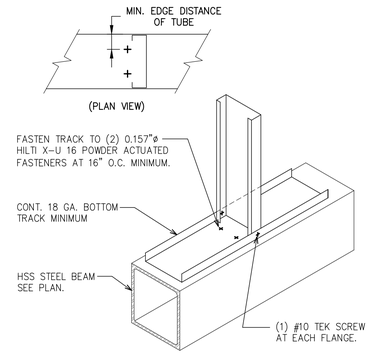

5 STUD TRACK TO STEEL
N.T.S.

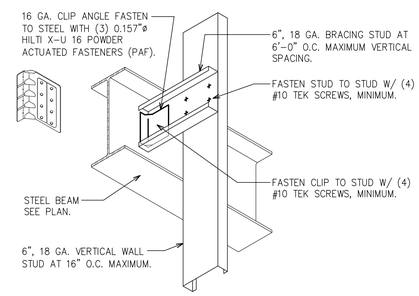

6 BRACING STUD DETAIL
N.T.S.

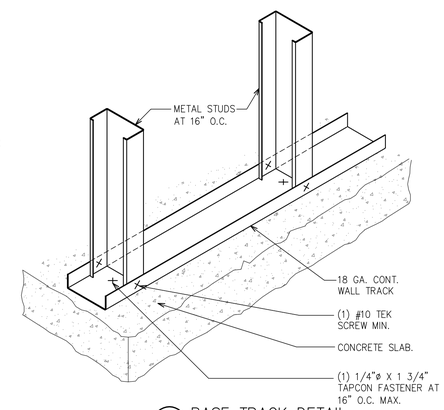

7 BASE TRACK DETAIL
N.T.S.

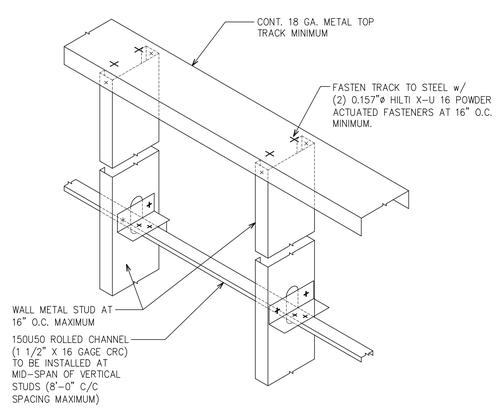

8 STUD BRACING DETAIL
N.T.S.

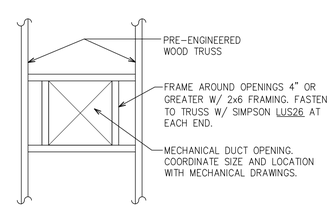

9 TYPICAL ROOF OPENING SUPPORT
NOT TO SCALE (PLAN VIEW)

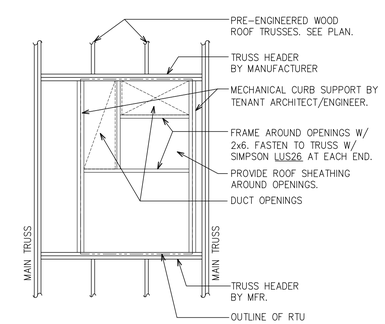

10 MECHANICAL UNIT SUPPORT
NOT TO SCALE (PLAN VIEW)

FWH Architects
3336 Grand Blvd. Suite 201
Holiday, Florida 34690
Ph. 727. 815. 3336
FABER@FWHARCHITECTS.COM

brightwork real estate
3708 WEST SWANN AVE, SUITE 200
TAMPA, FL 33609
PHONE: 813.874.1700

ALAN C. GUENTHER, P.E.
FL PE #53308

no.	date	revision descriptions

CHIPOTLE MEXICAN GRILL BUILDING SHELL
NOLTE RD. AND KYRST RUN
ST. CLOUD, FLORIDA

08.29.2025
date

25008
comm. no.

WALL SECTIONS

S300

ACG PROFESSIONAL ENGINEERING, INC.
16912 Melissa Ann Dr Lutz, FL 33558
Ph: 813.963.1906 STRUCTURAL
Alan C. Guenther, P.E. #53308 / C.A. #26813

PLOT DATE: 8.29.2025

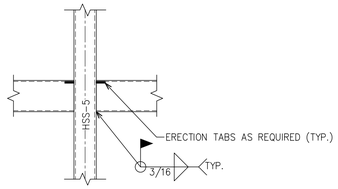

4 ENLARGED DETAIL
SCALE: 3/4" = 1'-0"

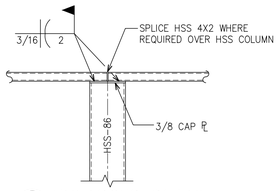

5 ENLARGED DETAIL
SCALE: 3/4" = 1'-0"

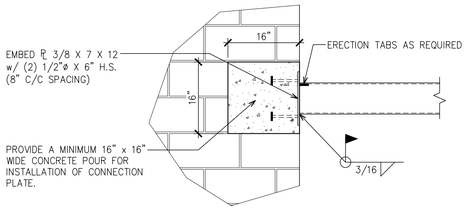

6 ENLARGED DETAIL
SCALE: 3/4" = 1'-0"

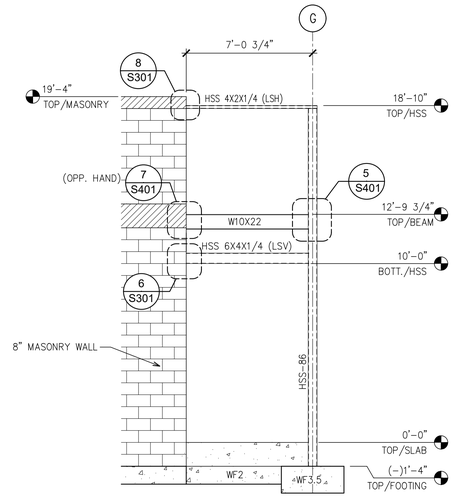

3 STEEL ELEVATION AT GRID '5'
SCALE: 1/4" = 1'-0"

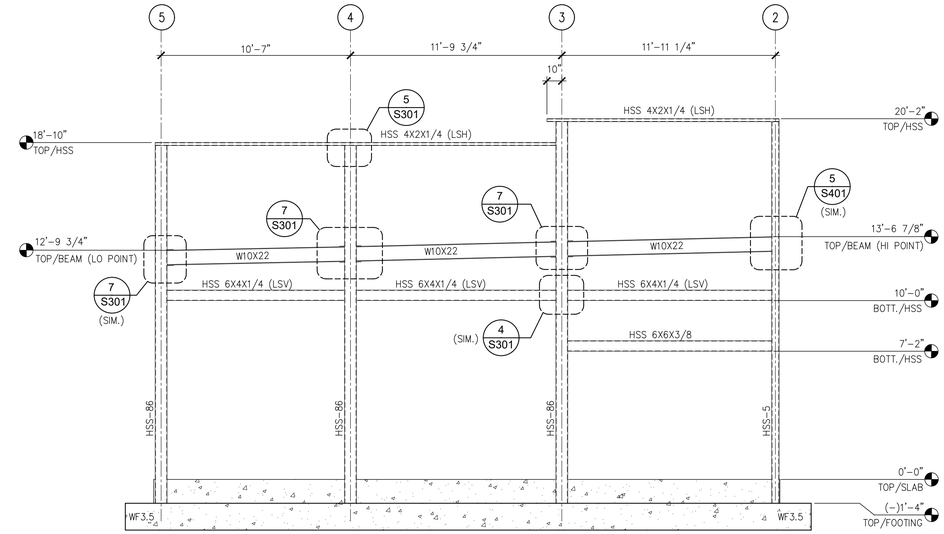

1 STEEL ELEVATION AT GRID 'G'
SCALE: 1/4" = 1'-0"

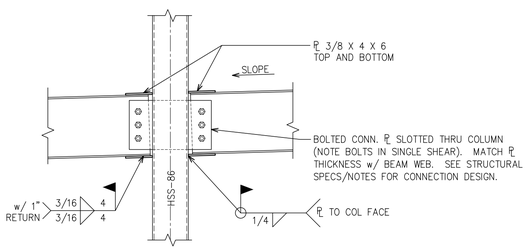

7 ENLARGED DETAIL
SCALE: 3/4" = 1'-0"

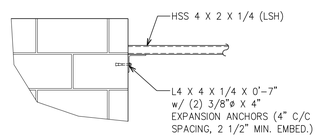

8 ENLARGED DETAIL
SCALE: 3/4" = 1'-0"

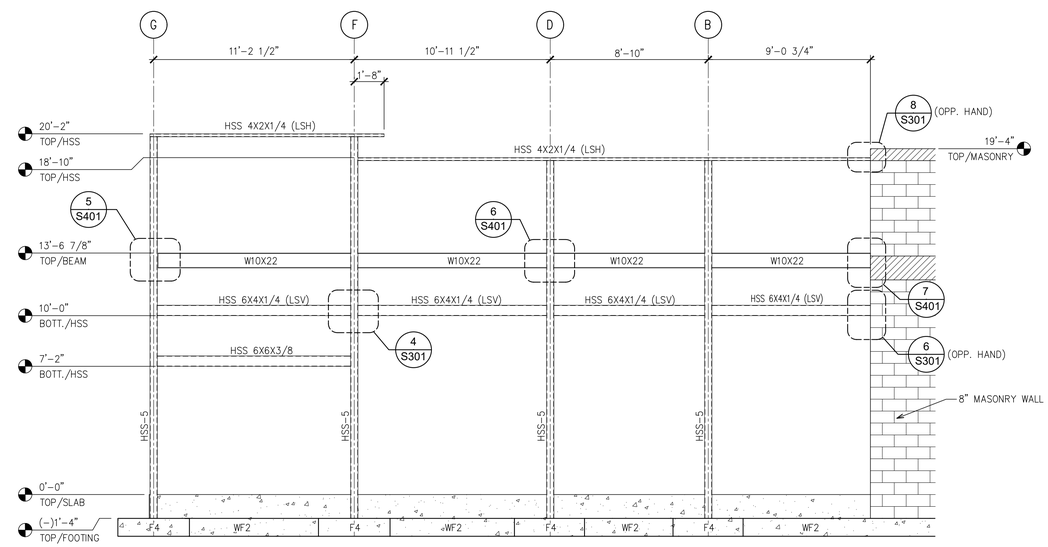

2 STEEL ELEVATION AT GRID '2'
SCALE: 1/4" = 1'-0"

SHEATHING NAILING SCHEDULE:
(10d RING-SHANK NAILS)
A. PANEL END/EDGE AT 6" O.C.
PANEL FIELD AT 12" O.C.
B. PANEL END/EDGE AT 6" O.C.
PANEL FIELD AT 6" O.C.
C. PANEL END/EDGE AT 6" O.C.
PANEL FIELD AT 4" O.C.

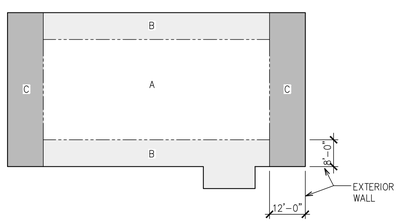

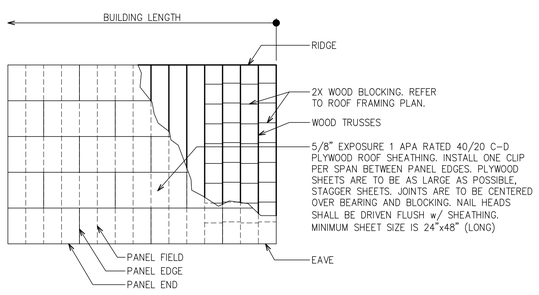

9 ROOF SHEATHING – FASTENING
NOT TO SCALE

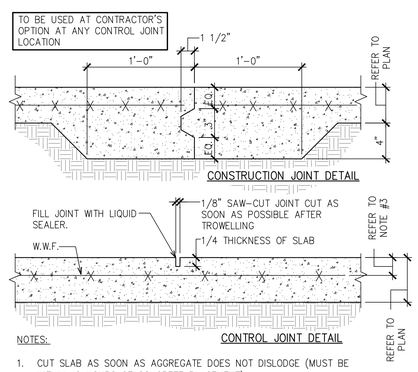

NOTES:
1. CUT SLAB AS SOON AS AGGREGATE DOES NOT DISLODGE (MUST BE WITHIN 12 HOURS OF CONCRETE PLACEMENT).
2. HAND TOOL JOINT TO FACE OF WALL WHERE SAW DOES NOT REACH.
3. PLACE REINFORCING AT MID-DEPTH FOR SLABS LESS THAN 5" THICK. PLACE REINFORCING 1/3 SLAB DEPTH (FROM TOP) FOR SLABS 5" THICK OR GREATER.

10 CONTROL AND CONSTRUCTION JOINT
SCALE: 1 1/2" = 1'-0"

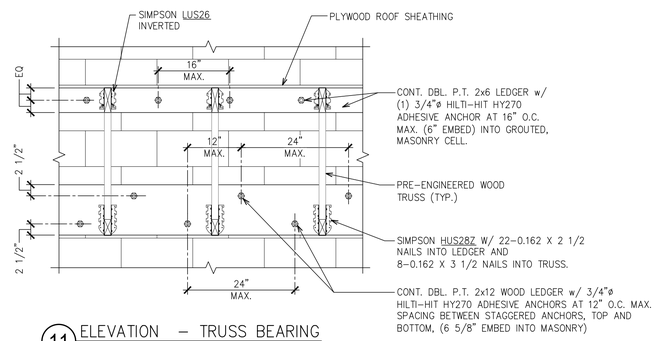

11 ELEVATION – TRUSS BEARING
SCALE: 3/4" = 1'-0"

FWH Architects
3336 Grand Blvd. Suite 201
Holiday, Florida 34690
Ph. 727. 815. 3336
FABER@FWHARCHITECTS.COM

brightwork real estate
3708 WEST SWANN AVE,
SUITE 200
TAMPA, FL 33609
PHONE: 813.874.1700

ALAN C. GUENTHER, P.E.
FL PE #53308

no.	date	revision descriptions

CHIPOTLE MEXICAN GRILL
BUILDING SHELL

NOLTE RD. AND KYRST RUN
ST. CLOUD, FLORIDA

08.29.2025
date

25008
comm. no.

STEEL ELEVATIONS AND DETAILS

S301

ACG PROFESSIONAL ENGINEERING, INC.
16912 Melissa Ann Dr. . Lutz, FL . 33558
Ph: 813.963.1906 STRUCTURAL
Alan C. Guenther, P.E. #53308 / C.A. #26813

PLOT DATE: 8.29.2025

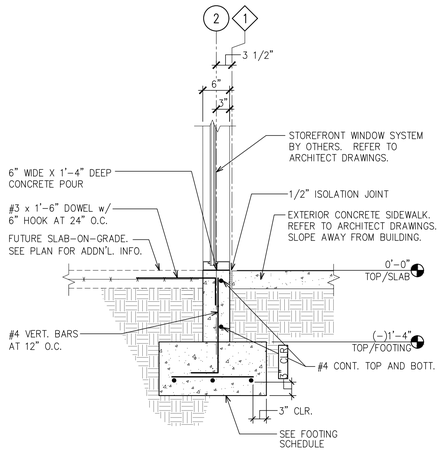

1 SECTION
SCALE: 3/4" = 1'-0"

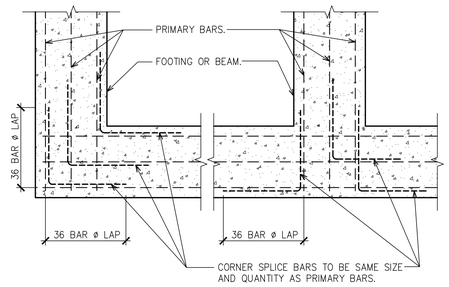

TYPICAL INTERSECTION OF CORNER BARS AT WALLS, BEAMS, AND FOOTINGS

2 CORNER BAR DETAIL
NOT TO SCALE

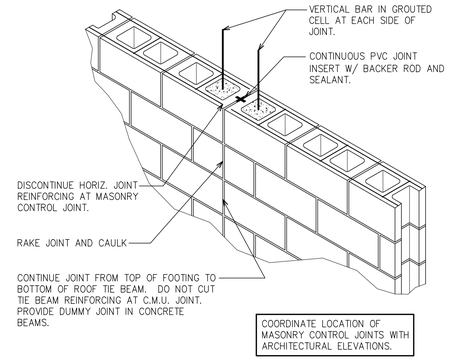

COORDINATE LOCATION OF MASONRY CONTROL JOINTS WITH ARCHITECTURAL ELEVATIONS.

3 MASONRY CONTROL JOINT DETAIL
SCALE: 1 1/2" = 1'-0"

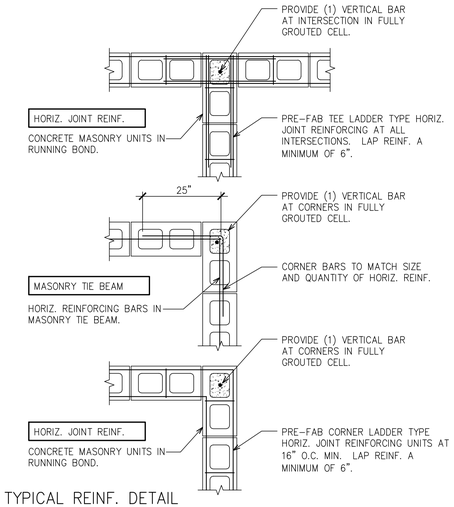

4 TYPICAL REINF. DETAIL AT CORNERS AND INTERSECTIONS
SCALE: N.T.S.

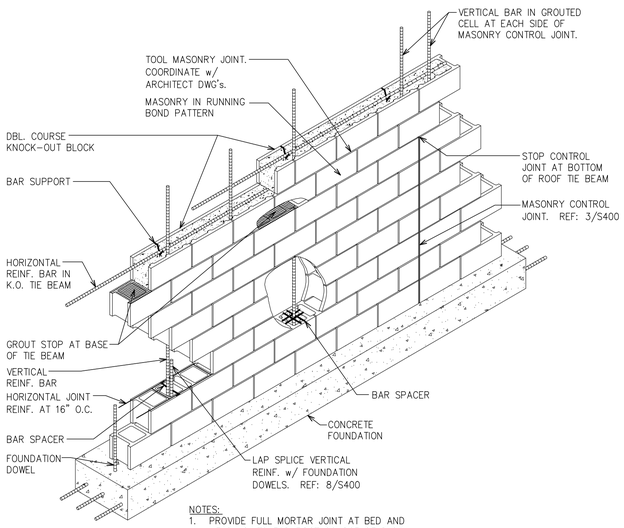

NOTES:
1. PROVIDE FULL MORTAR JOINT AT BED AND HEAD JOINTS FOR FIRST COURSE OF BLOCK.
2. GROUT MASONRY SOLID BELOW GRADE.

5 TYPICAL MASONRY CONSTRUCTION
NOT TO SCALE

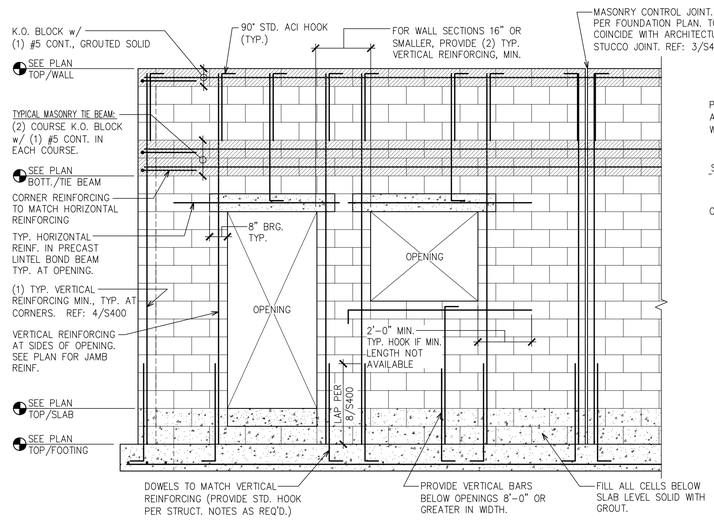

6 TYPICAL MASONRY REINFORCING AT OPENINGS – ELEVATION
NOT TO SCALE

NOTE:
CONTRACTOR SHALL VERIFY LOCATION OF ALL UNDERGROUND PIPING, CONDUIT, ETC. WITH APPROPRIATE SUBCONTRACTOR.

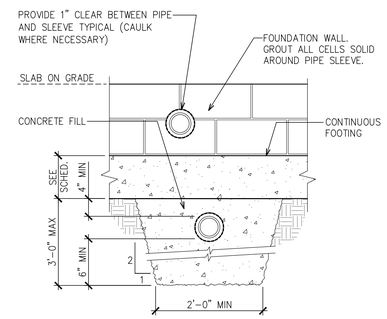

7 FOUNDATION DETAIL AT PENETRATION
NOT TO SCALE

NOTES:
1. SEE PLANS, SECTIONS AND NOTES FOR LOCATION(S) OF FILLED CELLS AND FOR REINFORCING.
2. CONCRETE FOR FILLED CELLS: STRENGTH = 3,000 PSI MIN. AT 28 DAYS MAX. AGGREGATE SIZE = 3/8" (PEA GRAVEL) SUBMIT MIX DESIGN FOR REVIEW BY THE ENGINEER.DO NOT USE THE SAME MIX AS DESIGNED FOR OTHER CAST-IN-PLACE CONCRETE.
3. ALLOW MORTAR TO SET PRIOR TO COMMENCING GROUTING.

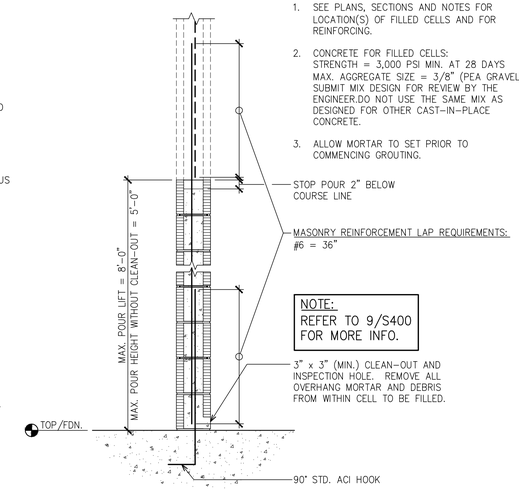

NOTE:
REFER TO 9/S400 FOR MORE INFO.

8 MASONRY LIFT DETAIL
SCALE: 3/4" = 1'-0"

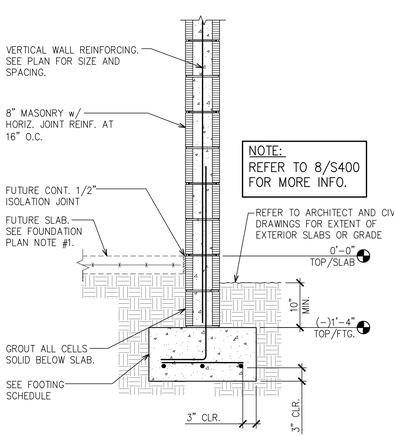

NOTE:
REFER TO 8/S400 FOR MORE INFO.

9 EXTERIOR WALL FOOTING
SCALE: 3/4" = 1'-0"

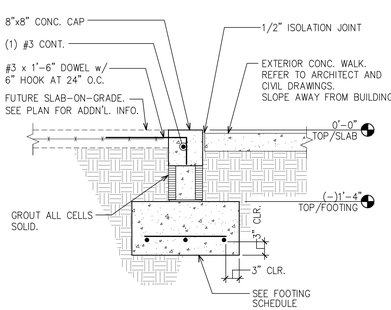

10 SECTION
SCALE: 3/4" = 1'-0"

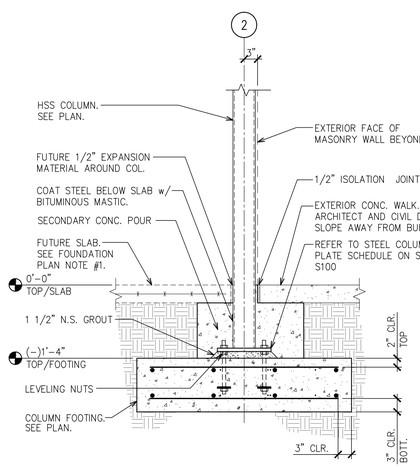

11 STEEL COLUMN FOUNDATION
SCALE: 3/4" = 1'-0"

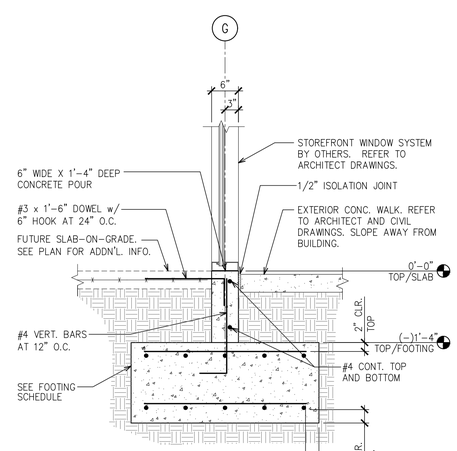

12 SECTION
SCALE: 3/4" = 1'-0"

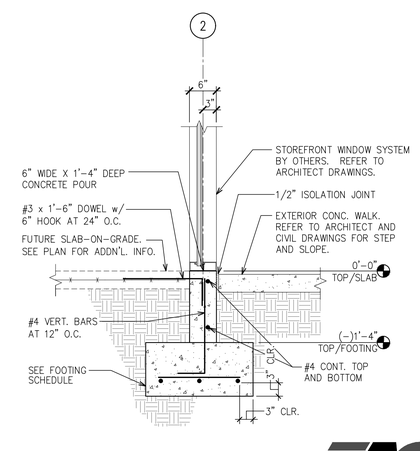

13 SECTION
SCALE: 3/4" = 1'-0"

FWH Architects
3336 Grand Blvd. Suite 201
Holiday, Florida 34690
Ph. 727. 815. 3336
FABER@FWHARCHITECTS.COM

brightwork real estate
3708 WEST SWANN AVE, SUITE 200
TAMPA, FL 33609
PHONE: 813.874.1700

ALAN C. GUENTHER, P.E.
FL PE #53308

no.	date	revision descriptions

CHIPOTLE MEXICAN GRILL
BUILDING SHELL
NOLTE RD. AND KYRST RUN
ST. CLOUD, FLORIDA

08.29.2025
date
25008
comm. no.

SECTIONS AND DETAILS

S400

ACG PROFESSIONAL ENGINEERING, INC.
16912 Melissa Ann Dr . Lutz, FL . 33558
Ph: 813.963.1906 STRUCTURAL
Alan C. Guenther, P.E. #53308 / C.A. #26813

PLOT DATE: 8.29.2025

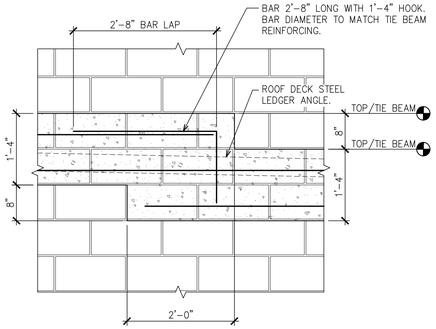

NOTES:
1. MASONRY TIE BEAM SHALL BE TB-1. REFER TO TIE BEAM SCHEDULE ON SHEET S200
2. STEP TIE BEAM A MAXIMUM OF 8". LOCATE TIE BEAM STEPS AS REQUIRED WITH SLOPED DECK LEDGER ANGLE.

1 MASONRY TIE BEAM – STEP
NOT TO SCALE

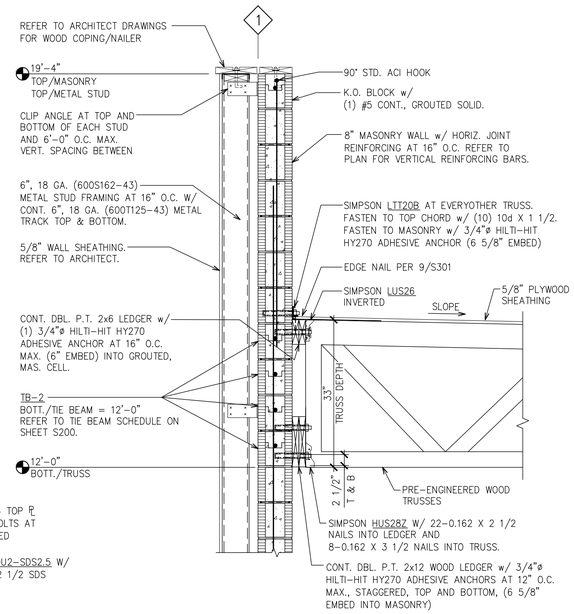

2 TRUSS BEARING
SCALE: 3/4" = 1'-0"

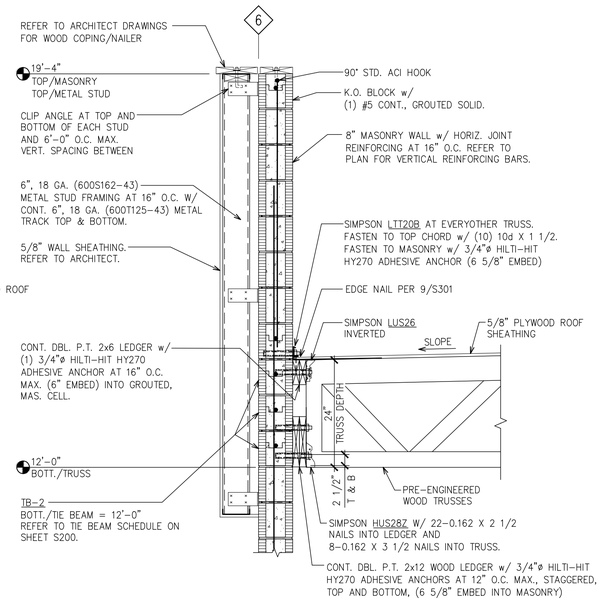

3 TRUSS BEARING
SCALE: 3/4" = 1'-0"

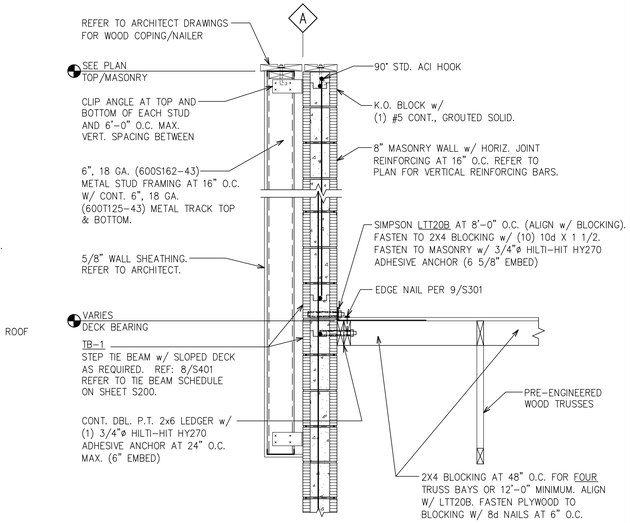

4 DECK BEARING
SCALE: 3/4" = 1'-0"

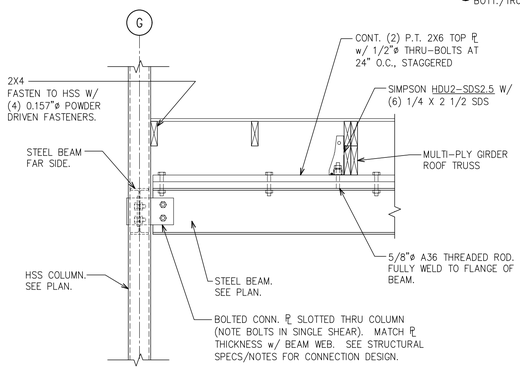

5 BEAM CONNECTION
SCALE: 3/4" = 1'-0"

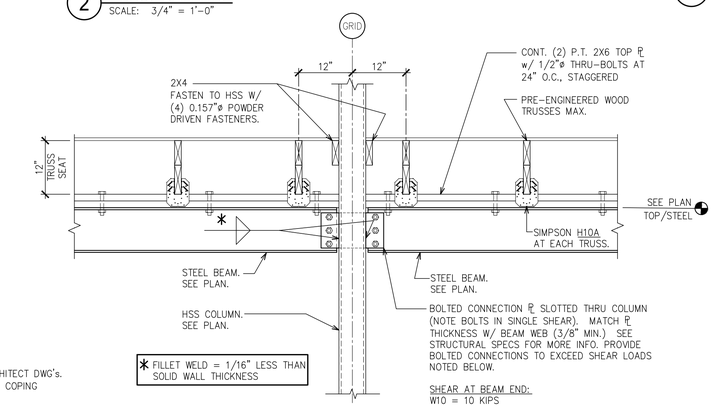

6 BEAM-COLUMN CONNECTION
SCALE: 3/4" = 1'-0"

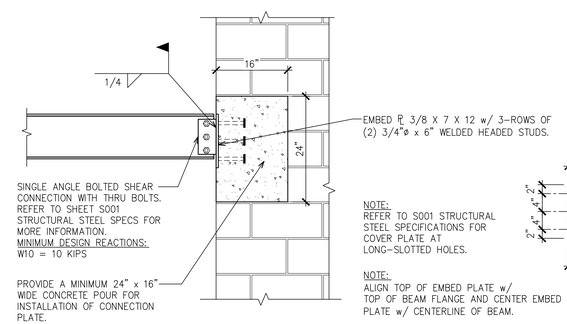

7 BEAM CONNECTION TO CONCRETE
SCALE: 3/4" = 1'-0"

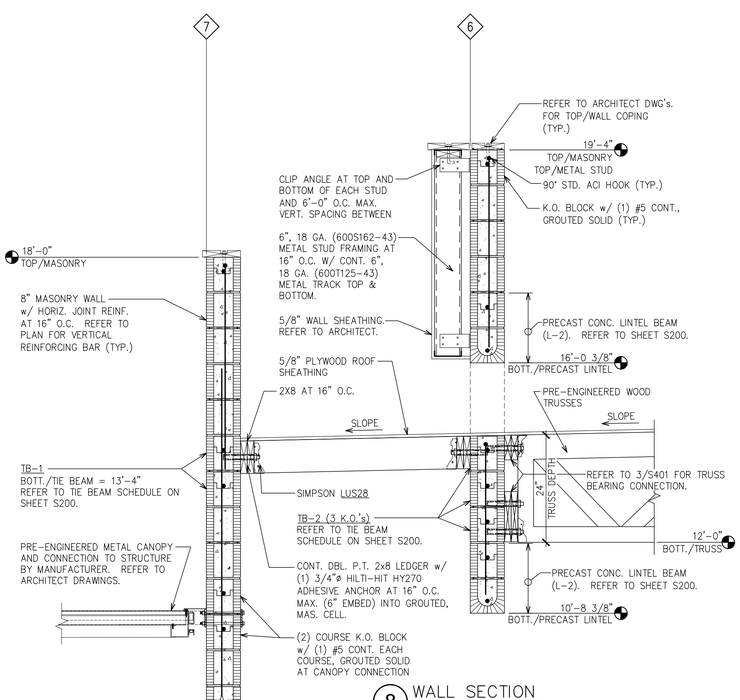

8 WALL SECTION
SCALE: 3/4" = 1'-0"

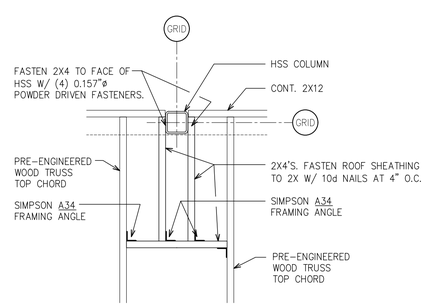

NOTE:
TYPICAL FRAMING AT STEEL HSS COLUMNS

9 DETAIL (PLAN VIEW)
SCALE: 3/4" = 1'-0"

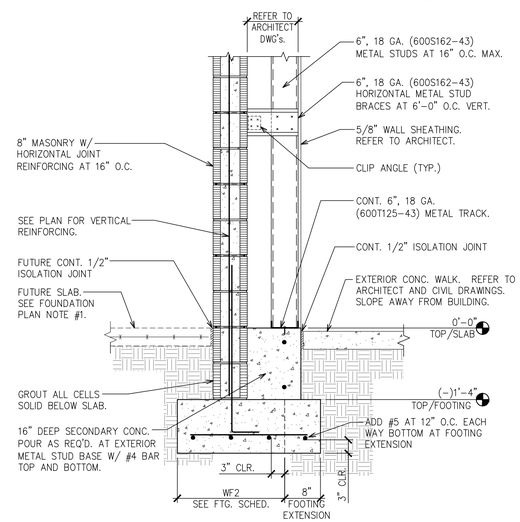

10 SECTION
SCALE: 3/4" = 1'-0"

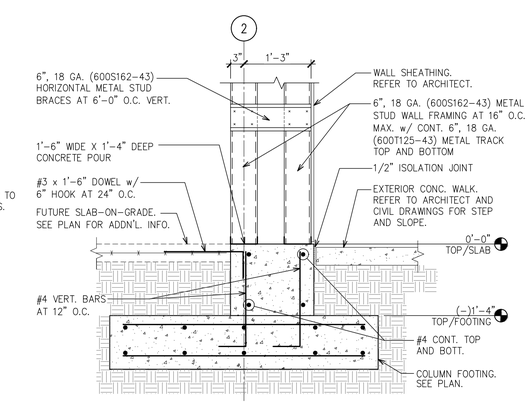

11 SECTION
SCALE: 3/4" = 1'-0"

FWH Architects
3336 Grand Blvd. Suite 201
Holiday, Florida 34690
Ph. 727. 815. 3336
FABER@FWHARCHITECTS.COM

brightwork real estate
3708 WEST SWANN AVE, SUITE 200
TAMPA, FL 33609
PHONE: 813.874.1700

ALAN C. GUENTHER, P.E.
FL PE #53308

ACG PROFESSIONAL ENGINEERING, INC.
16912 Melissa Ann Dr Lutz, FL 33558
Ph: 813.963.1906 STRUCTURAL
Alan C. Guenther, P.E. #53308 / C.A. #26813

no.	date	revision descriptions

CHIPOTLE MEXICAN GRILL BUILDING SHELL
NOLTE RD. AND KYRST RUN
ST. CLOUD, FLORIDA

08.29.2025
date

25008
comm. no.

SECTIONS AND DETAILS

S401

PLOT DATE: 8.29.2025

STEPANEK-LEWIS AND ASSOCIATES
2257 TWELVE OAKS WAY, SUITE 103
WESLEY CHAPEL, FL 33544
PH (813) 991-1248
REGISTRY # 8397
25-095
MATTHEW D. LEWIS, P.E. FL LIC#56189

PLUMBING SPECIFICATIONS

SCOPE: THE CONTRACTOR SHALL VISIT THE SITE AND EXAMINE THE DRAWINGS AND SPECIFICATIONS BEFORE SUBMITTING A PROPOSAL. ALL WORK SHALL BE IN ACCORDANCE WITH THE FLORIDA BUILDING CODES EIGHTH EDITION (2023), WITH AMENDMENTS, AND LOCAL CODES AND ORDINANCES. INSTALLATION SHALL COMPLY WITH THE CODE REFERENCED STANDARDS SET BY NFPA, ASHRAE, ASPE, SMACNA, NEC AND UL. THE SYSTEMS, EQUIPMENT, DEVICES AND ACCESSORIES SHALL BE INSTALLED, FINISHED, TESTED AND ADJUSTED FOR CONTINUOUS AND PROPER OPERATION. THE CONTRACTOR SHALL BE RESPONSIBLE FOR HIS WORK FITTING IN PLACE AND SHALL COORDINATE WITH OTHER TRADES TO AVOID INTERFERENCE WITH THEIR WORK. THE INFORMATION GIVEN HEREIN AND ON THE DRAWINGS IS AS EXACT AS COULD BE SECURED, BUT ITS EXTREME ACCURACY IS NOT GUARANTEED. THE DRAWINGS ARE DIAGRAMMATIC, INTENDED TO SHOW GENERAL ARRANGEMENT, CAPACITY AND LOCATION OF VARIOUS COMPONENTS, EQUIPMENTS, AND DEVICES. IF WORK IS REQUIRED IN A MANNER TO MAKE IT IMPOSSIBLE TO PRODUCE FIRST CLASS WORK, OR SHOULD DISCREPANCIES APPEAR AMOUNG THE CONTRACT DOCUMENTS, OR BETWEEN THE CONTRACT DOCUMENTS AND THE MANUFACTURER'S RECOMMENDATIONS,THE CONTRACTOR SHALL REQUEST INTERPRETATION BEFORE PROCEEDING WITH WORK. CONTRACTOR SHALL FURNISH AND INSTALL ALL MINOR ITEMS WHICH ARE OBVIOUSLY AND REASONABLY NECESSARY TO COMPLETE THE INSTALLATION WHETHER OR NOT SPECIFIED IN THE DOCUMENTS.

REQUIRED COORDINATION: ALL WORK SHALL BE COORDINATED WITH ALL TRADES INVOLVED. OFFSETS IN DUCTS AND PIPING (INCLUDING DIVIDED DUCTS) AND TRANSITIONS AROUND OBSTRUCTIONS SHALL BE PROVIDED AT NO ADDITIONAL COST TO THE OWNER.

CONSTRUCTION PLANS: IN GENERAL, PLANS AND DIAGRAMS ARE SCHEMATIC ONLY AND SHOULD NOT BE SCALED.

REQUIRED ACCESS: CONTRACTOR SHALL ENSURE THAT ALL EQUIPMENT AND DEVICES THAT REQUIRE REPLACEMENT, SERVICING, ADJUSTING OR MAINTENANCE SHALL BE LOCATED TO ALLOW EASY ACCESS AND SPACE FOR REMOVAL OF INTERNAL ASSEMBLIES, IF REQUIRED. CONTRACTOR SHALL PROVIDE ACCESS PANELS WHERE REQUIRED TO ALLOW ACCESS, EVEN IF NOT INDICATED ON THE DRAWINGS AT NO ADDITIONAL COST TO OWNER.

WIND RESISTANCE: ALL EQUIPMENT, APPLIANCE AND SUPPORTS LOCATED EXTERIOR OF THE FACILITY SHALL BE INSTALLED TO RESIST WIND LOADS AS DETAILED IN THE BUILDING CODE.

CUTTING AND PATCHING: ALL OPENINGS AROUND DUCT OR PIPE PENETRATIONS THROUGH SMOKE OR FIRE RATED FLOORS, CEILINGS OR WALLS SHALL BE SEALED AIRTIGHT WITH MATERIALS HAVING A RATING EQUAL TO THE MATERIAL OF THE WALL, CEILING OR FLOOR PENETRATED.

EQUIPMENT TAGS: ALL EQUIPMENT WILL HAVE A PERMANENTLY FIXED TAG CORRESPONDING TO THE EQUIPMENT TAG ON THE ENGINEER'S DRAWINGS.

FIRESTOPPING: UL APPROVED MATERIALS AND METHODS SHALL PROTECT THE PENETRATIONS OF FIRE AND/OR SMOKE RATED WALLS, CEILINGS OR FLOORS. THE RATING OF THE FIRESTOPPPING SHALL EQUAL THE RATING OF THE RATED ASSEMBLY. ALL INSULATION SHALL HAVE COMPOSITE FIRE AND SMOKE HAZARD RATINGS AS TESTED BY PROCEDURE ASTM E-84, NFPA-225, UL-723 NOT EXCEEDING:

FLAME SPREAD	25
SMOKE DEVELOPED	50
FUEL DISTRIBUTED	50

ACCESSORIES SUCH AS ADHESIVE, MASTIC, CEMENTS AND TAPES SHALL HAVE THE SAME COMPONENT RATING AS LISTED ABOVE.

SERVICE AND PERMITS: CONTRACTOR SHALL MAKE ALL ARRANGEMENTS WITH UTILITY COMPANIES FOR SERVICE AND CONNECTIONS AND SHALL PAY FOR PERMITS.

SHOP DRAWINGS: EACH TRADE SHALL PREPARE AND SUBMIT SHOP DRAWINGS IN ACCORDANCE WITH PROCEDURES OUTLINED IN DIVISION 1. RESPONSIBILITY FOR ERRORS OR OMISSIONS IN THE SUBMITTALS SHALL NOT BE RELIEVED BY THE ARCHITECT'S OR ENGINEER'S REVIEW. ENGINEER'S PROCESSING WILL NOT CONSTITUTE A COMPLETE CHECK BUT WILL INDICATE ONLY THAT A GENERAL METHOD OF CONSTRUCTION AND DETAILING IS SATISFACTORY. AT A MINIMUM SUBMITTALS SHALL INCLUDE FIXTURES, VALVES, PIPING, INSULATION AND ACCESSORIES.

START-UP: CONTRACTOR SHALL STARTUP ALL EQUIPMENT AND FOLLOW THE MANUFACTURER'S START-UP PROCEDURES.

OPERATING AND MAINTENANCE DATA: SUBMIT THREE COPIES OF MANUFACTURER'S OPERATING AND MAINTENANCE INSTRUCTIONS AND SPARE PARTS LIST FOR EACH PIECE OF EQUIPMENT.

SUPPLEMENTARY SUPPORTS: CONTRACTOR SHALL PROVIDE ALL SUPPLEMENTARY STEEL REQUIRED TO SUSPEND MECHANICAL EQUIPMENT AND MATERIALS, IN ORDER TO PROVIDE A "VIBRATION-FREE" RIGID INSTALLATION.

DIELECTRIC UNIONS: PROVIDE DIELECTRIC UNIONS OR FLANGES AT CONNECTIONS OR CONTACT BETWEEN PIPES OF DISSIMILAR METALS.

WATER PIPING: INSIDE WATER LINES SHALL BE HARD-DRAWN COPPER TUBING, TYPE "L" ABOVE-GROUND, TYPE "K" BELOW-GROUND. PROVIDE DIELECTRIC UNIONS WHERE DISSIMILAR METAL ARE IN CONTACT. ALL BURIED PIPING SHALL BE PROTECTED FROM CORROSION WITH 3/8" THICK FOAM RUBBER INSULATION WITH SEAMS SEALED WATERTIGHT. WATER PIPING SHALL BE TYPE-L COPPER TUBING, WITH WROUGHT COPPER FITTINGS (ASTM-B88). CONTRACTOR SHALL PROVIDE FOR EXPANSION AND CONTRACTION OF TUBING. TUBING SHALL BE SLEEVED AT PENETRATION OF CONCRETE SLABS OR WALLS.

WATER HAMMER ARRESTORS: INSTALL WATER HAMMER ARRESTERS AT EACH HOT AND COLD FIXTURE SUPPLY.

EXPOSED PIPING: EXPOSED PIPING SHALL BE POLISHED CHROMIUM ON EITHER BRASS OR BRONZE. PROVIDE ADA INSULATED WATER AND WASTE LINE COVERINGS FOR WALL HUNG SINKS AND LAVATORIES.

VALVES: ALL VALVES SHALL HAVE A MINIMUM OF 125 PSIG WORKING PRESSURE. VALVES AND COCKS MAY NOT BE INDICATED IN EVERY INSTANCE ON THE DRAWINGS, BUT WHETHER OR NOT SHOWN, ALL VALVES, COCKS AND CHECK VALVES NECESSARY FOR THE PROPER OPERATION OF THE SYSTEM SHALL BE FURNISHED AND INSTALLED. INSTALL ISOLATION/SHUT-OFF VALVES AT ALL MAIN RISERS, AND MAIN BRANCH TAKEOFFS. INSTALL ISOLATION/SHUT-OFF VALVES ON EACH INLET AND OUTLET OF EACH PIECE OF EQUIPMENT. PROVIDE A FLANGE OR UNION BETWEEN THE VALVE AND THE EQUIPMENT TO PERMIT DISCONNECTION, REMOVAL AND SERVICE.

STERILIZATION OF DOMESTIC WATER SYSTEM: THE ENTIRE DOMESTIC WATER DISTRIBUTION SYSTEM SHALL BE THOROUGHLY STERILIZED AS REQUIRED BY THE HEALTH AUTHORITY OR WATER PURVEYOR HAVING JURISDICTION, OR IN THE ABSENCE OF A PRESCRIBED METHOD, THE PROCEDURE DESCRIBED IN EITHER AWWA C651 OR AWWA C652, OR AS DESCRIBED IN SECTION 610 FBC-P.

VENTING: THE STACKS SHALL BE EXTENDED THROUGH ROOF OF BUILDING TO POINTS NOT LESS THAN 12" ABOVE ROOF. VENTS SHALL BE OFFSET AS REQUIRED TO PENETRATE ROOFS AT LEAST 3 FEET FROM THE RIDGE OR EDGE OF BUILDING AND 10 FEET FROM ANY FRESH AIR INTAKE OR OPERABLE WINDOW OR DOOR.

SANITARY, GREASE, WASTE, STORM(ROOF DRAINAGE) AND VENT PIPING: ALL BURIED AND UNBURIED PIPING AND FITTINGS SHALL BE SCHEDULE 40 PVC-DWV. (SOLID CORE) SLOPE OF SANITARY OR DRAINAGE PIPING 2-1/2" AND SMALLER SHALL BE A MINIMUM OF 1/4" PER FOOT; PIPING 3" AND LARGER SHALL BE SLOPED A MINIMUM OF 1/8" PER FOOT. CLEANOUTS WILL BE LOCATED NOT MORE THAN 100 FEET APART AND AT EACH CHANGE OF DIRECTION GREATER THAN 45° ALONG THE HORIZONTAL DRAIN. CLEANOUTS SHALL BE INSTALLED AT BASE OF EACH STACK. CONCEALED CLEANOUTS SHALL HAVE CAST BRASS CHROMIUM PLATED FLAT ACCESS COVER PLATE.

PLUMBING FIXTURES AND TRIM: PLUMBING FIXTURES SHALL BE FURNISHED AND INSTALLED IN A NEAT AND WORKMANLIKE MANNER WITH PROPER CONNECTIONS TO SUPPLY AND DRAINAGE PIPING. ALL FIXTURES SHALL BE FREE OF FLAWS AND DEFECTS OF ANY SORT IN MATERIAL AND WORKMANSHIP AND SHALL OPERATE PERFECTLY WHEN INSTALLED IN ACCORDANCE WITH MANUFACTURER'S DIRECTIONS. CONTRACTOR SHALL PROVIDE ROUGH-IN, AND SHALL CONNECT ALL FIXTURES TO THE PLUMBING SYSTEMS. ALL FIXTURES TO BE PROVIDED WITH CHROME-PLATED SUPPLIES AND STOPS. PROVIDE 17 GAUGE CHROME-PLATED BRASS TRAPS FOR ALL FIXTURES WITHOUT INTEGRAL TRAPS. PROVIDE CONCEALED ARM CARRIERS AND SUPPORTS FOR ALL FIXTURES REQUIRING SAME.

PIPE INSULATION: INSTALL INSULATION PRODUCTS IN ACCORDANCE WITH MANUFACTURER'S INSTRUCTIONS AND IN ACCORDANCE WITH RECOGNIZED INDUSTRY PRACTICES. SEAL ALL JOINTS, BREAKS, TEARS AND PENETRATIONS WITH FIRE RETARDANT, VAPOR BARRIER MASTIC. COVER VALVES, FITTINGS AND SIMILAR ITEMS IN EACH PIPING SYSTEMS. INSULATE ALL DOMESTIC WATER AND INTERIOR STORM PIPE WITH 1" THICK FIBERGLASS SECTIONAL PIPE COVERING WITH CANVAS JACKET OR ARMAFLEX AP (ASTM E-84).

TESTING: TEST ALL WASTE AND VENT PIPING FOR A PERIOD OF NOT LESS THAN 8 HOURS BY CAPPING OR PLUGGING. ALL JOINTS TO A LEVEL OF THE HIGHEST FIXTURE OR FITTINGS. FILLING THE SYSTEM WITH WATER, AND OBSERVING FOR LEAKS. TEST WATER PIPING AT 100 PSIG FOR A PERIOD OF 8 HOURS, OBSERVING FOR ANY VISIBLE LEAKS. TEST PIPING AGAIN WITH FIXTURES INSTALLED. REPAIR ANY LEAKS FOUND BY REMAKING JOINT. DO NOT USE CAULKING OR SIMILAR METHODS TO CORRECT LEAKS. UPON REPAIRING ANY LEAKS FOUND. AGAIN TEST THAT PORTION OF THE SYSTEM AS DESCRIBED ABOVE.

EQUIPMENT FURNISHED BY OTHERS: WHERE SHOWN ON THE DRAWINGS, THE CONTRACTOR SHALL MAKE ALL PIPING CONNECTIONS TO EQUIPMENT FURNISHED BY OTHERS. THIS WORK SHALL INCLUDE FURNISHING AND INSTALLATION OF ALL WATER AND DRAIN PIPING. ALL WORK SHALL BE PERFORMED IN ACCORDANCE WITH RECOMMENDATIONS OF EQUIPMENT MANUFACTURER.

GUARANTEE: THE ONE-YEAR GUARANTEE PERIOD SHALL NOT START UNTIL THE PROJECT IS FULLY COMPLETED AND THE CONTRACTOR HAS RECEIVED THE FINAL PAYMENT AND CERTIFICATION OF COMPLETION. ALL EQUIPMENT AND ALL WORK SHALL BE FULLY GUARANTEED, PARTS AND LABOR, FOR ONE YEAR FROM THE DATE OF THE CERTIFICATE OF COMPLETION. REPAIRS MADE DURING THIS PERIOD MUST BE FULLY GUARANTEED FOR AN ADDITIONAL ONE YEAR PERIOD FROM THE DATE OF REPAIRS. IN ADDITION, THE CONTRACTOR SHALL ASSUME FULL RESPONSIBILITY FOR ANY DAMAGE TO THE BUILDING, AND ITS CONTENTS OR OTHER EQUIPMENT, CAUSED BY DEFECTS OR IMPROPER INSTALLATION OF EQUIPMENT OR MATERIAL INSTALLED.

SUBSTITUTIONS: CONTRACTOR SHALL PAY FOR ANY AND ALL ADDED COSTS ASSOCIATED WITH ANY SUBSTITUTION, INCLUDING SUBSTITUTIONS THAT REQUIRE CHANGES TO THE OTHER BUILDING COMPONENTS, SUCH AS ELECTRICAL, STRUCTURAL REINFORCING, CEILINGS, WALLS, ROOFS, ETC. THIS WILL INCLUDE ANY ENGINEERING/ARCHITECTURAL RE-DESIGN COSTS AS A RESULT OF SAID SUBSTITUTION. THESE COSTS SHALL NOT BE BORNE BY THE OWNER, ARCHITECT, NOR ENGINEER, REGARDLESS OF ACCEPTABILITY OF SUBSTITUTION. ENGINEER RESERVES THE RIGHT TO ACCEPT OR DENY ANY SUBSTITUTION THAT HE DOES NOT DEEM TO BE EQUIVALENT, AND CONTRACTOR SHALL PROVIDE SPECIFIED OR EQUIVALENT MATERIALS/EQUIPMENT AT NO ADDITIONAL COST TO OWNER, SHOULD A SUBSTITUTION BE DENIED.

FIXTURE & CONNECTION SCHEDULE

FIXTURE	TAG	BRANCH SIZE				MANUFACTURER/MODEL	REMARKS
		DRAINAGE		WATER			
		WASTE	VENT	COLD	HOT		
FLOOR CLEANOUT	FCO	--	--	--	--	ZURN # Z1400-ZB	"LEVEL-TROL" ADJUSTABLE FLOOR CLEANOUT, DURA-COATED CAST-IRON, POLISHED BRONZE TOP, ADJUSTABLE TO FLOOR FINISH.
HOSE BIBB	HB-1	--	--	3/4"	--	WOODFORD # B65	HOSE BIBB: FREEZELESS WALL HYDRANT, FLUSH WALL BOX, POLISHED BRASS FACE PLATE, BRONZE CASING, HOSE CONNECTION WITH INTEGRAL VACUUM BREAKER, WHEEL HANDLE. T-KEY FOR BOX.
BOOSTER PUMP PROVIDE SEPARATE LINE ITEM PRICE	BP-1	--	--	1-1/2"	--	PERFECT PRESSURE PUMP # P3-2HP NOTE: ONLY REQUIRED IF SITE PRESSURE CANNOT MEET TENANT MINIMUM PRESSURE IN LEASE.	SEPARATE LINE ITEM - PACKAGED DOMESTIC WATER PRESSURE BOOSTER SYSTEM. SYSTEM TO INCLUDE 2-HP MOTOR AT 208-VOLTS/1-PHASE, PROVIDING 46-PSI BOOST, 32-GPM. PROVIDE ALL COMPONENTS NECESSARY FOR COMPLETE INSTALLATION INCLUDING, BUT NOT LIMITED TO: UNIONS, BALL VALVES, DIGITAL PRESSURE/SPEED CONTROLLER, AND PRESSURE REDUCING VALVES.
ROOF HYDRANT	HY-1	--	--	1"	--	WOODFORD # RHY1-MS	ROOF HYDRANT: FREEZELESS, ONE-PIECE VARIABLE FLOW PLUNGER, ROD GUIDE, BRASS NOZZLE, COMPLETE WITH ROOF DECK MOUNTING SYSTEM AND EPDM BOOT/SEAL.

PLUMBING LEGEND

DESCRIPTION	ABBREV.	SYMBOL
SANITARY PIPING	SAN	
GREASE PIPING	GR	GR
VENT PIPING	V	
DOMESTIC COLD WATER	CW	
DOMESTIC HOT WATER	HW	
GAS PIPING	GAS	GAS
BALL/ISOLATION VALVE	BV	
GRADE CLEAN OUT	COTG	COTG
FLOOR CLEAN OUT	FCO	FCO
WALL CLEAN OUT	WCO	WCO
PIPE TURNING UP		
PIPE TURNING DOWN		
CAPPED PIPING		
TYPICAL ITEM	TYP	
BALANCE VALVE		

NOTE ON SITE UTILITIES:

CONTRACTOR SHALL FIELD VERIFY LOCATIONS & INVERTS OF ALL UTILITY MAINS (I.E. SEWER, GAS, DOMESTIC WATER, ETC.) PRIOR TO ANY DEMOLITION OR CONSTRUCTION. ADVISE ENGINEER OF ANY DISCREPANCIES BEFORE PROCEEDING ANY FURTHER.

NOTE: PLEASE REFER TO CIVIL ENGINEER'S UTILITY PLANS FOR FURTHER REFERENCE AND CONTINUATIONS BEYOND 5-FT FROM BUILDING. FIELD COORDINATE WITH SITE CONTRACTOR PRIOR TO ANY INSTALLATION OF UNDERGROUND PIPING.

DOMESTIC WATER SERVICE REQUIREMENTS:

THE DOMESTIC WATER SERVICE FOR TENANT A SHALL BE A MINIMUM OF 45-GPM AT 60 PSI DYNAMIC PRESSURE AT THE POINT OF BUILDING ENTRY. IF THE PRESSURE IS UNDER 60 PSI AT THE POINT OF ENTRY, A PACKAGED BOOSTER PUMP SHALL BE PROVIDED AND INSTALLED. (LINE ITEM PRICE WITH BID REQUIRED)
IMMEDIATELY UPON INSTALLATION OF THE WATER SERVICE TO THE BUILDING, THE PLUMBING CONTRACTOR SHALL PERFORM A PRESSURE TEST. SHOULD THE PRESSURE NOT MEET THE ABOVE STATED CRITERIA, THE GENERAL CONTRACTOR SHALL PROVIDE RESULTS TO THE ARCHITECT AT THE EARLIEST POSSIBLE DATE. THE ARCHITECT WILL THEN PROVIDE THE NECESSARY DESIGN REMEDIES TO THE CONTRACTOR FOR PRICING, PERMIT AND CONSTRUCTION, IF LINE ITEM BOOSTER PUMP PACKAGE SPECIFIED IS NOT SUFFICIENT.

FWH Architects
3336 Grand Blvd. Suite 201
Holiday, Florida 34690
Ph. 727. 815. 3336
FABER@FWHARCHITECTS.COM

brightwork real estate
3708 WEST SWANN AVE, SUITE 200
TAMPA, FL 33609
PHONE: 813.874.1700

TO THE BEST OF THE KNOWLEDGE OF THE ARCHITECTS AND ENGINEERS, SAID PLANS AND SPECIFICATIONS COMPLY WITH THE APPLICABLE MINIMUM BUILDING CODES AND THE APPLICABLE MINIMUM FIRE SAFETY STANDARDS

MATTHEW D. LEWIS LICENSE No 56189 STATE OF FLORIDA PROFESSIONAL ENGINEER

no.	date	revision descriptions

CHIPOTLE MEXICAN GRILL BUILDING SHELL
NOLTE RD. AND KYRST RUN
ST. CLOUD, FLORIDA

08.29.2025
date

25008
comm. no.

PLUMBING SPECIFICATIONS

P100

8/29/2025 2:23 PM

KEY NOTES ON PLAN:

1. 4"GREASE WITH CLEANOUT 5-FT INSIDE REAR WALL LABELED "GREASE" (PROVIDE MAXIMUM DEPTH INVERT - MINIMUM 48" BFF).
2. 4"SANITARY WITH CLEANOUT 5-FT INSIDE REAR WALL (MIN 48" BFF).
3. 1-1/2"CW SERVICE TO BUILDING. ROUTE UP INSIDE BUILDING TIGHT TO WALL WITH BALL VALVE AT 24"AFF, THEN UP WITHIN JOISTS.
4. EXTEND 1-1/2"CW THROUGH JOISTS TO BOOSTER PUMP # BP-1.
5. HANG BOOSTER PUMP TIGHT BELOW JOISTS. COORDINATE LOCATION WITH CHIPOTLE'S T.I. LAYOUT OF ROOF EQUIPMENT, DUCTWORK, ETC., PRIOR TO INSTALLATION. BOOSTER PUMP PROVIDED ONLY IF REQUIRED TO MEET TENANT PRESSURE REQUIREMENTS IN LEASE.
6. PROVIDE 1-1/2" CW VALVED END WITH CAP FROM BP-1 IN JOISTS.
7. ROUTE 1/2"CW PIPING FROM HOSE BIBB AND STUB UP WITHIN JOISTS WITH VALVE FOR FUTURE TENANT TIE-IN.
8. VTR LOCATED 10-FT FROM ALL FRESH AIR INTAKES. CAP IF UNUSED AT THIS STAGE OF PROJECT. COORDINATE LOCATIONS WITH CHIPOTLE'S T.I. LAYOUT, IF AVAILABLE.
9. SEE CIVIL FOR CONTINUATION 5-FT FROM BUILDING.
10. GREASE INTERCEPTOR PER DETAIL ON PLANS, LOCATE PER CIVIL ENGINEERING UTILITY PLAN. PLUMBER TO PROVIDE & INSTALL. (REFER TO SIZING CAUTION NOTE ON P300)
11. ROUTE 3"VENT FROM GREASE INTERCEPTORS UNDERGROUND TO BUILDING AND UP TIGHT TO WALL, THEN ROUTE UP TO JOISTS. TENANT TO CONNECT TO VTR. NOTE, THE VENT TO FALL WITHIN 3'-10" ZONE, TIGHT TO WALL. (2)
12. ROUTE 1"CW PIPING FROM ROOF HYDRANT AND DOWN WITHIN JOISTS WITH VALVE FOR FUTURE TENANT TIE-IN.
13. REFER TO ARCHITECTURAL PLANS FOR ROOF DRAIN SPECIFICATIONS.
14. ROUTE 4"PRIMARY AND 4"OVERFLOW ROOF DRAIN LINES BELOW ROOF DECK AS HIGH AS POSSIBLE AND DOWN TIGHT TO WALL (CRITICAL). ROUTE PRIMARY STORM LINE UNDERGROUND. ROUTE OVERFLOW STORM LINES THROUGH WALL AT HEIGHT SHOWN ON ARCHITECTURAL PLANS AND CONNECT TO DOWNSPOUT NOZZLE ABOVE GRADE (SPILL ONTO SPLASH BLOCKS).

STEPANEK-LEWIS AND ASSOCIATES
2257 TWELVE OAKS WAY, SUITE 103
WESLEY CHAPEL, FL 33544
PH (813) 991-1248
REGISTRY # 8397
25-095
MATTHEW D. LEWIS, P.E. FL LIC#56189

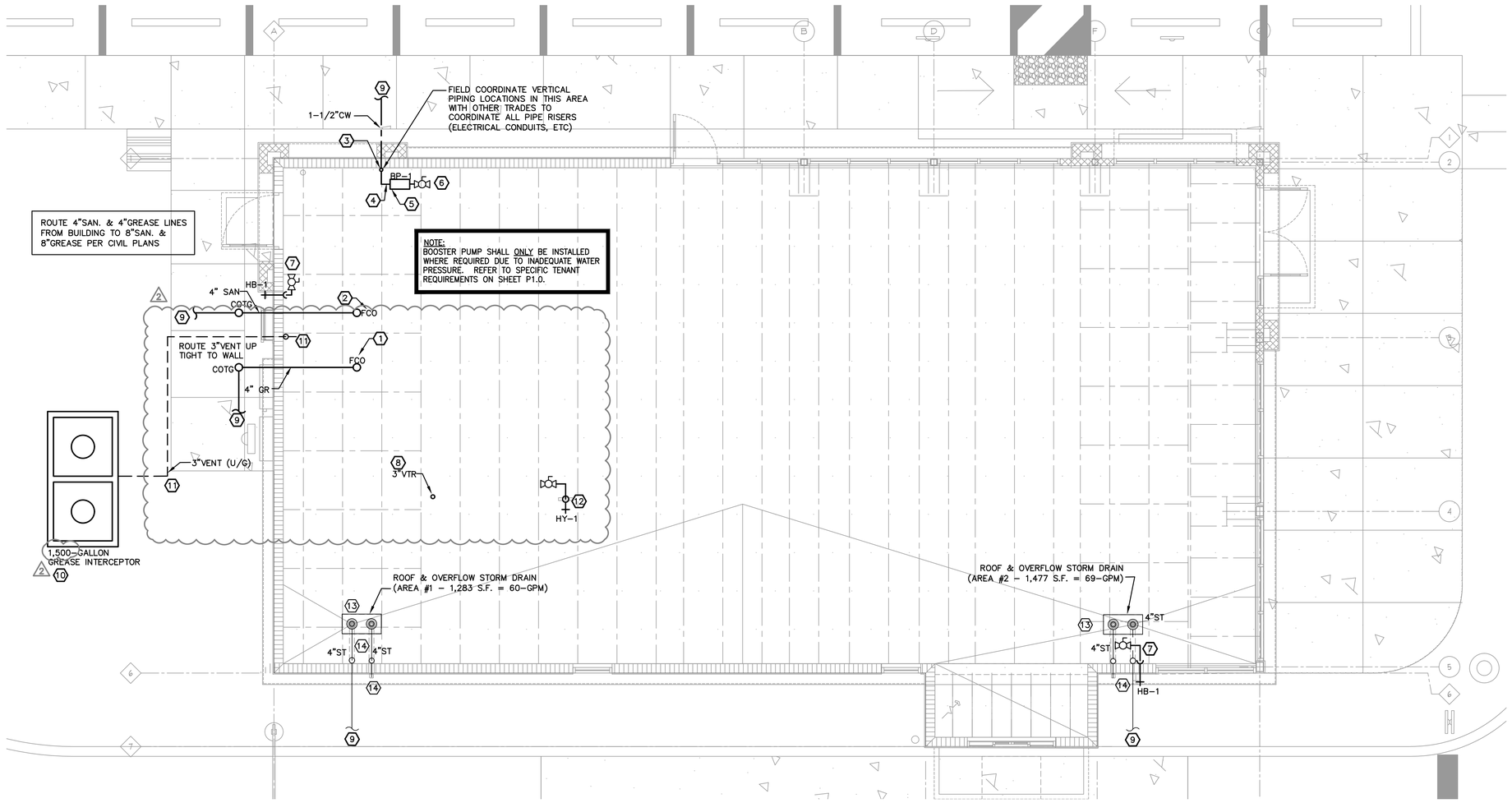

PLUMBING FLOOR PLAN

SCALE: 1/4" = 1'-0"

FWH Architects
3336 Grand Blvd. Suite 201
Holiday, Florida 34690
Ph. 727. 815. 3336
FABER@FWHARCHITECTS.COM

brightwork real estate
3708 WEST SWANN AVE, SUITE 200
TAMPA, FL 33609
PHONE: 813.874.1700

TO THE BEST OF THE KNOWLEDGE OF THE ARCHITECTS AND ENGINEERS, SAID PLANS AND SPECIFICATIONS COMPLY WITH THE APPLICABLE MINIMUM BUILDING CODES AND THE APPLICABLE MINIMUM FIRE SAFETY STANDARDS

MATTHEW D. LEWIS LICENSE No 56189 STATE OF FLORIDA PROFESSIONAL ENGINEER

no.	date	revision descriptions
1	12.02.2025	REVISED PER COORDINATION W/ TENANT INTERIORS

CHIPOTLE MEXICAN GRILL
BUILDING SHELL
NOLTE RD. AND KYRST RUN
ST. CLOUD, FLORIDA

08.29.2025
date

25008
comm. no.

PLUMBING FLOOR PLAN

P200

12/3/2025 12:33 PM

STEPANEK-LEWIS AND ASSOCIATES
2257 TWELVE OAKS WAY, SUITE 103
WESLEY CHAPEL, FL 33544
PH (813) 991-1248
REGISTRY # 8397
25-095
MATTHEW D. LEWIS, P.E. FL LIC#56189

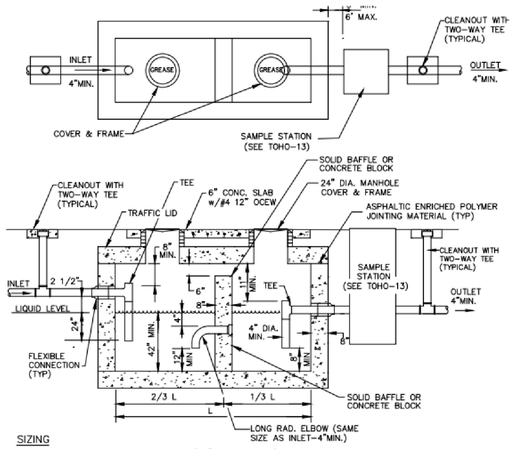

SIZING

*750 GALLON MINIMUM LIQUID CAPACITY (42" LIQUID DEPTH)
SIZING SHALL BE PER SECTION 20.6 OF TOHO WATER AUTHORITY SPECIFICATIONS.

NOTES:

1. STRUCTURE SHALL CONFORM WITH F.D.O.T. DESIGN STANDARDS. PROVIDE FOR A MINIMUM H-20 LOADING.
2. CAST-IN-PLACE STRUCTURES SHALL BE DESIGNED BY FLORIDA LICENSED ENGINEER.
3. PRECAST STRUCTURES SHALL CONFORM TO ASTM C478
4. GREASE TRAP SHALL BE 2 COMPARTMENT TYPE WITH 1/3-2/3 SPILT.
5. LIDS SHALL BE LABELED "GREASE".
6. INSTALLATION SHALL BE IN ACCORDANCE WITH STANDARD PLUMBING CODES.
7. INLET AND OUTLET PIPING REQUIRE A TWO-WAY CLEANOUT TEE.
8. CLEAN-OUTS SHALL BE PROVIDED BETWEEN ALL STRUCTURES WHERE MULTIPLE INTERCEPTORS ARE INSTALLED IN SERIES.
9. SAMPLE STATION SHALL BE INSTALLED DOWNSTREAM OF THE FINAL INTERCEPTOR WHERE MULTIPLE INTERCEPTORS ARE INSTALLED.
10. A-LOK CONNECTORS SHALL BE GROUTED FROM SPRINGLINE OF PIPE DOWN ONLY.

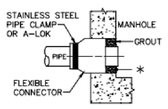

FLEXIBLE CONN. DETAIL

* IF USING A-LOK CONNECTOR, GROUT FROM THE BOTTOM OF THE PENETRATION TO THE SPRINGLINE OF THE PIPE.

GREASE INTERCEPTOR TOHO-12 2022

KITCHEN GREASE INTERCEPTOR SYSTEM DETAIL ONE 1,500-GALLON INTERCEPTOR

SCALE: NONE 2

GREASE INTERCEPTOR SIZING CAUTION:
THE PLUMBING ENGINEER OF RECORD FOR THE SHELL HAS SIZED GREASE INTERCEPTOR BASED ON THE TENANT'S PROPOSED USE. THE UNIT SPECIFIED SHALL BE THE BASIS OF THE CONTRACTOR'S BIDS. PRIOR TO CONSTRUCTION, CONTRACTOR SHALL CONFIRM WITH TENANT THAT ALL INFORMATION USE IN G.T. SIZING (ABOVE) IS STILL VALID. UNDER NO CIRCUMSTANCES SHALL THE CONTRACTOR SUBMIT SHOP DRAWINGS OR ORDER GREASE INTERCEPTOR UNTIL THE INTERIOR FINISH-OUT CRITERIA HAS BEEN CONFIRMED.

GREASE INTERCEPTOR TO BE FURNISHED AND INSTALLED BY PLUMBING CONTRACTOR.

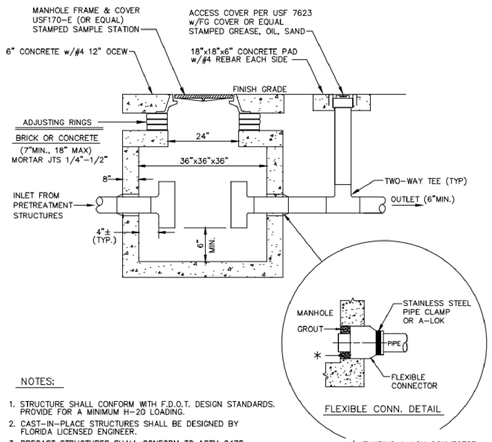

FLEXIBLE CONN. DETAIL

NOTES:

1. STRUCTURE SHALL CONFORM WITH F.D.O.T. DESIGN STANDARDS. PROVIDE FOR A MINIMUM H-20 LOADING.
2. CAST-IN-PLACE STRUCTURES SHALL BE DESIGNED BY FLORIDA LICENSED ENGINEER.
3. PRECAST STRUCTURES SHALL CONFORM TO ASTM C478
4. LIDS SHALL BE LABELED "SAMPLE STATION".
5. INSTALLATION SHALL BE IN ACCORDANCE WITH STANDARD PLUMBING CODES.
6. INLET AND OUTLET PIPING REQUIRE A TWO-WAY CLEANOUT TEE.
7. SAMPLE STATION SHALL BE PLACED DOWNSTREAM OF ALL PRETREATMENT STRUCTURES.
8. A-LOK CONNECTORS SHALL BE GROUTED FROM SPRINGLINE OF PIPE DOWN ONLY.

* IF USING A-LOK CONNECTOR, GROUT FROM THE BOTTOM OF THE PENETRATION TO THE SPRINGLINE OF THE PIPE.

SAMPLE STATION TOHO-13 2022

SAMPLE STATION FOR GR. INT.

SCALE: NONE

GREASE TRAP SIZING RESTAURANTS
(S) X (GS) X (HR/12) X (LF) = GALLLONS REQUIRED
(S)SEATS = 52 DINING SEATS (GS)GALLONS OF WASTE PER SEAT = 25 GALLONS AT 10-SINGLE SERVICE; 25-DISHMACHINE/CHINA (HR/12)HOUR OF OPERATION = 11 HOURS / 12 (LF)LOADING FACTOR = 1.0 OTHER HIGHWAY
52 X 25 X 11/12 X 1.0 = 1,191
(1) 1,500-GALLON GREASE INTERCEPTOR INSTALLED

2 SIZING BASED ON FL.ADMIN.CODE RULE#64E-6, PER FBC-PLBG, 1003.3.4, EXCEPTION, USING AN OUTDOOR GREASE INTERCEPTOR.

TYPICAL PLUMBING SYSTEM WITH BYPASS OPTION

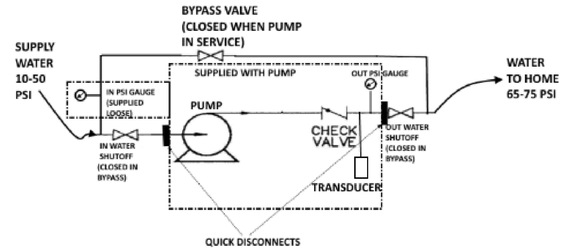

NOTE: MOUNT FROM BEAMS WITH (2) UNISTRUT, 1/2" RODS, AND BEAM CLAMPS

PACKAGED BOOSTER SYSTEM SCHEMATIC

SCALE: NONE

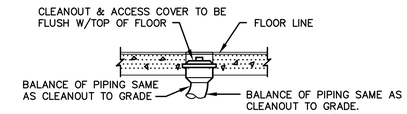

FLOOR CLEANOUT (FCO)

SCALE: NONE

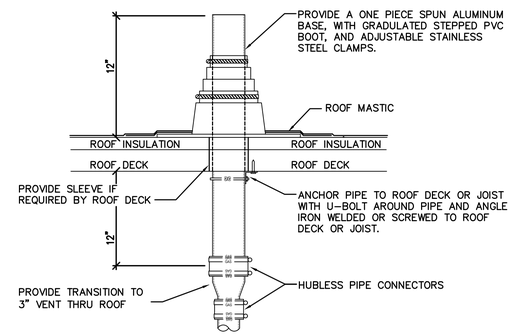

VENT THRU ROOF DETAIL

SCALE: NONE

REFER TO PLANS FOR VTR LOCATIONS. PROVIDE MINIMUM OF 10 FT FROM ALL FRESH AIR INTAKES. PROVIDE 1" FIBERGLASS INSULATION WITH ALL-SERVICE JACKET ON VENT PIPE INSIDE OF BUILDING WITHIN 6 FT OF VTR LOCATION. COORDINATE AND VERIFY FLASHING AND COUNTER FLASHING WITH ROOFING CONTRACTOR.

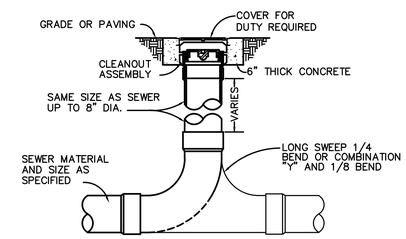

2-WAY GRADE CLEANOUT DETAIL (COTG)

SCALE: NONE

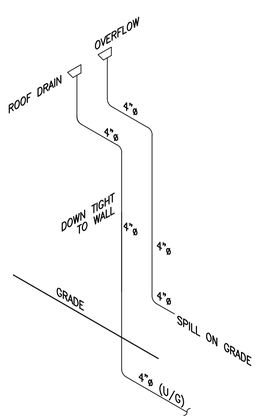

STORM ISOMETRIC RISERS

SCALE: NONE (TYP - 2)

ROOF DRAIN / PIPING SUMMARY							
AREA NUMBER	TOTAL ROOF AREA (SQFT) ①	RAINFALL RATE USED ②	RAINFALL GPM	VERTICAL PIPE SIZE ③		HORIZONTAL PIPE SIZE (1/8" SLOPE) ③	
				MIN SIZE PER CODE	SIZE USED	MIN SIZE PER CODE	SIZE USED
1	1,283	4.5" / HR	60	3"ø (87 GPM)	4"ø	4"ø (115-GPM)	4"ø
2	1,477	4.5" / HR	69	3"ø (87 GPM)	4"ø	4"ø (115-GPM)	4"ø

NOTES: ① INCLUDES 1/2 OF THE PARAPET WALL PER FL. BLDG. CODE-PLUMBING (2023), SECTION 1106.4.
② RAINFALL RATE PER FL. BLDG. CODE - PLUMBING (2023), FIGURE 1106.1, USING 4.5" RATE
③ FL. BLDG. CODE - PLUMBING (2023). CHAPTER 11, TABLE 1106.2

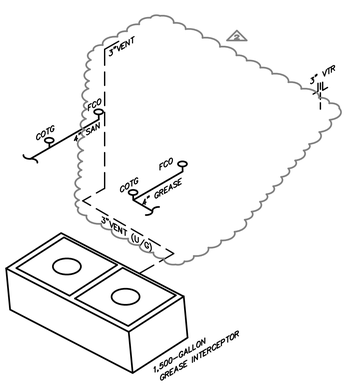

TOTAL DRAINAGE FIXTURE UNITS ALLOWABLE PER FBC-P TABLE 710.1(1) = 180 DFU AT 1/8" PER FOOT SLOPE.

SANITARY ISOMETRIC RISERS

SCALE: NONE

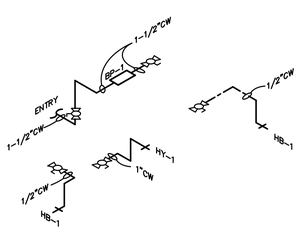

TOTAL WATER FIXTURE UNITS ALLOWABLE PER FBC-P TABLE E201.1 = 151 WFU NOT MORE THAN 200-FT

WATER ISOMETRIC RISER

SCALE: NONE

FWH Architects
3336 Grand Blvd. Suite 201
Holiday, Florida 34690
Ph. 727. 815. 3336
FABER@FWHARCHITECTS.COM

brightwork real estate
3708 WEST SWANN AVE, SUITE 200
TAMPA, FL 33609
PHONE: 813.874.1700

TO THE BEST OF THE KNOWLEDGE OF THE ARCHITECTS AND ENGINEERS, SAID PLANS AND SPECIFICATIONS COMPLY WITH THE APPLICABLE MINIMUM BUILDING CODES AND THE APPLICABLE MINIMUM FIRE SAFETY STANDARDS.

MATTHEW D. LEWIS LICENSE No 56189 STATE OF FLORIDA PROFESSIONAL ENGINEER

no.	date	revision descriptions
1	12.02.2025	REVISED PER COORDINATION W/ TENANT INTERIORS

CHIPOTLE MEXICAN GRILL BUILDING SHELL
NOLTE RD. AND KYRST RUN
ST. CLOUD, FLORIDA

08.29.2025
date
25008
comm. no.

PLUMBING RISERS & DETAILS

P300

12/3/2025 12:33 PM

PROJECT NOTES

ELECTRICAL

1. ALL WORK SHALL CONFORM TO:
   A. FLORIDA BUILDING CODE (FBCB) 2023- 8th EDITION.
   B. FLORIDA FIRE PREVENTION CODE (FFPC) 2021 - 8th EDITION.
   C. FLORIDA BUILDING CODE ENERGY CONSERVATION (FBCEC) 2023 - 8th EDITION.
   D. NATIONAL ELECTRIC CODE (NEC) - 2020 EDITION.
2. ALL MATERIALS SHALL BE NEW AND OF DOMESTIC ORIGIN AND SHALL BEAR UNDERWRITERS' LABEL WHERE APPLICABLE.
3. ALL WORK SHALL BE PERFORMED BY A LICENSED ELECTRICAL CONTRACTOR IN A FIRST-CLASS WORKMANLIKE MANNER. THE COMPLETED SYSTEM IS TO BE FULLY OPERABLE AND ACCEPTANCE OF THIS SYSTEM BY THE ENGINEER/ARCHITECT MUST BE A CONDITION OF THE SUB CONTRACT.
4. ALL WORK TO BE COORDINATED WITH OTHER TRADES TO AVOID INTERFERENCE WITH THE PROGRESS OF CONSTRUCTION.
5. CONTRACTOR TO GUARANTEE ALL MATERIALS AND WORKMANSHIP FREE FROM DEFECTS FOR A PERIOD OF NOT LESS THAN ONE (1) YEAR FROM DATE OF ACCEPTANCE.
6. CORRECTION OF ANY DEFECTS TO BE COMPLETED WITHOUT ADDITIONAL CHARGE AND TO INCLUDE REPLACEMENT OR REPAIR OF ANY OTHER PHASE OF THE INSTALLATION WHICH MAY HAVE BEEN DAMAGED THEREBY.
7. ALL REQUIRED INSURANCE TO BE PROVIDED FOR PROTECTION AGAINST PUBLIC LIABILITY OF PROPERTY DAMAGE FOR THE DURATION OF THE WORK.
8. CONTRACTOR TO PAY FOR ALL PERMITS, UTILITY FEES, INSPECTIONS AND TESTING.
9. ELECTRICAL INSTALLATION TO MEET ALL STANDARD REQUIREMENTS OF LOCAL POWER AND TELEPHONE COMPANIES.
10. MINIMUM WIRE SIZE SHALL BE #12 AWG, EXCLUDING CONTROL WIRING. UNLESS OTHERWISE NOTED, CONDUCTORS SHALL BE COPPER WITH THWN/THHN INSULATION. CONDUCTORS #12 AND SMALLER MAY BE SOLID; ALL THOSE #10 AND LARGER TO BE STRANDED.
11. ALL UNDERGROUND RACEWAYS SHALL BE GALVANIZED RIGID STEEL CONDUIT OR SCHEDULE 40 PVC OR SCHEDULE 80 PVC. ALL OTHER RACEWAYS TO COMPLY WITH GOVERNING CODES. MINIMUM CONDUIT UNDERGROUND SHALL BE 3/4" CONDUIT UNLESS OTHERWISE NOTED.
12. OUTLET BOXES SHALL BE PRESSED STEEL IN DRY LOCATIONS, CAST ALLOY WITH THREADED HUBS IN WET OR DAMP LOCATIONS, AND BE OF SPECIAL CONSTRUCTION FOR OTHER CLASSIFIED AREAS. ALL BOXES SHALL BE RECESSED (FLUSH) IN WALLS OR CEILINGS WHENEVER POSSIBLE.
13. DISCONNECT SWITCHES SHALL BE H.P. RATED, GENERAL OR HEAVY DUTY WHERE INDICATED, QUICK-MAKE, QUICK-BREAK TYPE. ENCLOSURES SHALL BE AS REQUIRED BY N.E.C. AND LOCATION (WEATHERPROOF, EXPLOSION- PROOF, ETC.).
14. ALL GENERAL PURPOSE SWITCHES AND RECEPTACLES SHALL BE THE PRODUCT OF A SINGLE MANUFACTURER. CATALOG NUMBERS LISTED ARE LEVITON. HOWEVER, COMPARABLE DEVICES BY HUBBELL, PASS & SEYMOUR, OR ARROW HART WILL BE ACCEPTED. COLOR OF DEVICES AND PLATES SHALL BE AS DICTATED BY ARCHITECT/OWNER.

    A. SWITCHES: #1221-2 SERIES.
    B. RECEPTACLES: #T5362 SERIES. (TAMPER RESISTANCE DEVICES)
    C. COVER PLATES: SMOOTH PLASTIC

    NOTE: ALL OTHER REQUIRED DEVICES SHALL MATCH IN COLOR AND STYLE.
15. ALL RACEWAYS AND PIPES, SPACED IN OR THROUGH 1st FLOOR CONCRETE SLAB, SHALL BE SPACED A MINIMUM OF 3" APART AND IN OR THROUGH 2nd FLOOR AND ABOVE CONCRETE SLABS, SHALL BE SPACED A MINIMUM OF 6" APART.
16. IT IS NOT THE INTENT OF THESE PLANS TO SHOW EVERY MINOR DETAIL OF CONSTRUCTION. THE CONTRACTOR IS EXPECTED TO FURNISH AND INSTALL ALL ITEMS FOR A COMPLETE ELECTRICAL SYSTEM, AND PROVIDE ALL NECESSARY DEVICES AND COMPONENTS FOR EQUIPMENT TO BE PLACED IN PROPER WORKING ORDER.
17. ALL ELECTRICAL RACEWAYS (METALLIC AND NONMETALLIC) SHALL HAVE AN EQUIPMENT GROUND CONDUCTOR SIZED IN ACCORDANCE WITH THE 2020 EDITION OF THE N.E.C.
18. LOAD DATA IS BASED ON INFORMATION GIVEN ENGINEER AT THE TIME OF DESIGN. VERIFY ALL EQUIPMENT NAMEPLATE RATINGS BEFORE ORDERING.
19. CIRCUITS SHOWN ON PLANS ARE TO DETERMINE LOAD DATA AND PANEL SIZES. THE CONTRACTOR IS TO PROVIDE CIRCUITS AND ROUTING OF CONDUITS TO SUIT JOB CONDITIONS.
20. FURNISH AND INSTALL DISCONNECT SWITCHES, WIRING, AND CONNECTIONS ON AIR CONDITIONING SYSTEM AS SHOWN ON PLANS. ELECTRICAL CONTRACTOR SHALL VERIFY AND COORDINATE WITH MECHANICAL CONTRACTOR REGARDING SUPPLY AND INSTALLATION OF ALL REQUIRED CONTROLS.
21. ALL SWITCHGEAR SHALL BE THE PRODUCT OF A SINGLE MANUFACTURER. SYSTEM DESIGN IS BASED ON THE SQUARE "D" COMPANY; HOWEVER, COMPARABLE EQUIPMENT BY EATON, G.E., AND SIEMENS WILL BE ACCEPTABLE. TANDEM AND HALF-SPACE CIRCUIT BREAKERS SHALL NOT BE USED. PROVIDE ARC FLASH WARNING SIGNAGE PER N.E.C. 110.16 FOR ALL SWITCHBOARDS AND PANELS.
22. WHERE SPECIFIED, UNDER OTHER NOTES AND SPECIFICATION SECTION, WITHIN THIS DOCUMENT, UNDERGROUND PVC CONDUIT RUNS SHALL HAVE RIGID STEEL ELBOWS AND RIGID STEEL SECTIONS AT SLAB PENETRATIONS. WHERE RIGID STEEL IS USED, IT SHALL BE COMPLETELY COATED WITH AN ALKALI AND RUST-RESISTANT BITUMASTIC PAINT, AND THREADS SHALL BE COATED WITH ZINC CHROMATE.
23. THE ELECTRICAL CONTRACTOR SHALL MEET AND COORDINATE WITH THE LOCAL UTILITY COMPANIES AT THE SITE PRIOR TO CONSTRUCTION. AT THAT TIME, THE CONTRACTOR SHALL COORDINATE ALL RELATED WORK WITH THE UTILITY COMPANIES' REPRESENTATIVES TO MEET THE OWNER'S SCHEDULE.
24. ALL ELECTRICAL CONDUCTORS SHALL BE INSTALLED IN AN APPROVED RACEWAY.
25. CONTRACTOR SHALL BE RESPONSIBLE FOR SEALING ALL CONDUIT PENETRATIONS MADE THROUGH FIRE RATED WALLS, CEILINGS, SLABS, ETC. PENETRATION SEALS SHALL BE PER U.L. ASSEMBLY STANDARDS.
26. CONDUIT SYSTEM REQUIREMENTS:

    UNDERGROUND - PVC WITH RIGID 90 THROUGH SLAB - WHERE REQUIRED IN OTHER SECTION OF THIS DOCUMENT.
    ABOVE FINISH FLOOR, CEILINGS, ETC. (INDOOR) - EMT WITH DIECAST SET SCREW FITTINGS.
    GALVANIZED RIGID CONDUITS - ABOVE GRADE AND WHERE SUSCEPTIBLE TO PHYSICAL DAMAGE.
    FLEXIBLE CONDUITS - INDOOR, ONLY SHORT RUNS NOT TO EXCEED 6'-0".
    SEALTITE - OUTDOOR, ONLY SHORT RUNS NOT TO EXCEED 6'-0".
    MC CABLE - ONLY AS APPROVED ELSEWHERE IN THIS DOCUMENT.
27. CONDUCTOR COLOR CODING:

    THE FOLLOWING APPLICABLE COLOR CODES SHALL BE IMPLEMENTED AND POSTED IN ALL PANELS, DISCONNECT SWITCHES, ETC., PER NEC ARTICLES 200.6(D) AND 215.12:

	120/240V., 1-PH.	120/208V., 3-PH.	277/480V., 3-PH.
PHASE 'A'	BLACK	BLACK	BROWN
PHASE 'B'	RED	RED	ORANGE
PHASE 'C'	-	BLUE	YELLOW
NEUTRAL	WHITE	WHITE	GRAY
GROUND	GREEN	GREEN	GREEN
ISOL. GROUND	GREEN/YELLOW	GREEN/YELLOW	-

28. GFI RECEPTACLES

    ALL RECEPTACLES WITHIN SIX FEET OF A WATER SOURCE SHALL BE A GFI RECEPTACLE OR PROTECTED BY A GFI BREAKER PER NFPA 70 (NEC) ARTICLE 210.8. THIS NOTE APPLIES TO ALL SHEETS.
29. PROVIDE ALL REQUIRED 0-10V WIRING TO 0-10V DIMMABLE FIXTURES AND CONTROLS AS REQUIRED. THIS 0-10V LOW VOLTAGE WIRING IS NOT SHOWN ON PLANS FOR DRAWING CLARITY. 0-10V WIRING SHALL BE TYPE COMPATIBLE WITH THE FIXTURE DIMMING DRIVER TYPE (CLASS 1 OR 2). CONTRACTOR SHALL COORDINATE WITH MANUFACTURER FOR CABLE TYPE, SIZE, AND INSTALLATION REQUIREMENT AND COMPLY ACCORDINGLY. ALL WIRING SHALL BE IN COMPLIANCE WITH N.E.C. ARTICLE 725.
30. ALL OUTDOOR RECEPTACLES SHALL BE WEATHER RESISTANCE RATED, GFI-TYPE WITH "WET WHILE IN USE" COVERS.
31. WHERE WIRE SIZES ARE SHOWN ON PLANS OR IN PANEL SCHEDULE, THE SAME WIRE SIZE, AS A MINIMUM, SHALL BE CARRIED THROUGHOUT THE CIRCUIT UNLESS SPECIFICALLY NOTED OTHERWISE ON PLANS.
32. THERE SHALL BE NO MORE THAN (6) SIX CURRENT CARRYING CONDUCTORS IN ANY ONE CONDUIT, UNLESS SPECIFICALLY NOTED OTHERWISE ON THE PLANS.
33. A CABLE, RACEWAY, BOX, OR LUMINARIES INSTALLED IN EXPOSED OR CONCEALED LOCATIONS UNDER METAL-CORRUGATED SHEET ROOF DECKING, SHALL BE INSTALLED AND SUPPORTED SO THERE IS NOT LESS THAN 1-1/2 INCHES MEASURED FROM THE LOWEST SURFACE OF THE ROOF DECKING TO THE TOP OF THE CABLE, RACEWAY, BOX OR LUMINARIES. CABLE, RACEWAY, OR BOX SHALL NOT BE INSTALLED IN CONCEALED LOCATIONS OF METAL-CORRUGATED SHEET DECKING TYPE ROOF.
34. SERVICE ENTRANCE EQUIPMENT BARRIERS REQUIREMENTS

    BARRIERS SHALL BE PROVIDED IN SERVICE EQUIPMENT SUCH THAT NO UNINSULATED, UNGROUNDED SERVICE BUSBAR, SERVICE TERMINALS OR SERVICE CONDUCTORS IS EXPOSED TO UNINTENTIONAL CONTACT BY PERSON OR MAINTENANCE EQUIPMENT PERSONAL, WHILE SERVICING LOAD TERMINALS. THIS SHALL INCLUDE BUT NOT LIMITED TO DISCONNECTS, MAIN BREAKERS, MAIN BREAKER PANELS, AND AUTOMATIC TRANSFER SWITCHES. SERVICE ENTRANCE EQUIPMENT SHALL BE PROVIDED, WITH BARRIERS, IF SPECIFIED OR NOT IN THE DRAWING. THESE BARRIERS SHALL BE IN FULL COMPLIANCE WITH N.E.C. SECTION 215.15, 230.71, 230.62(C) AND UL 67.

N1B

NOTES

CONTRACTOR

1. IT IS THE CONTRACTOR'S RESPONSIBILITY TO REVIEW ALL DRAWINGS AND SPECIFICATIONS, INCLUDING BUT NOT LIMITED TO ARCHITECTURAL, STRUCTURAL, MECHANICAL, PLUMBING, AND ELECTRICAL PRIOR TO SUBMITTING A BID.
2. REPORT ANY DISCREPANCIES TO ARCHITECT OR ENGINEER PRIOR TO BID.
3. BIDDERS ARE TO VISIT THE SITE AND FAMILIARIZE THEMSELVES WITH EXISTING CONDITIONS AND SATISFY THEMSELVES AS TO THE NATURE AND SCOPE OF THE WORK.
4. IT IS THE CONTRACTORS RESPONSIBILITY TO VERIFY ALL EXISTING SITE CONDITIONS INCLUDING BUT NOT LIMITED TO, SERVICE LOCATION, SERVICE LAYOUTS, AND TELEPHONE LOCATION, ETC.
5. THE SUBMISSION OF A BID WILL BE EVIDENCE THAT SUCH AN EXAMINATION HAS BEEN MADE. LATER CLAIMS FOR LABOR, EQUIPMENT, OR MATERIALS REQUIRED, OR FOR ANY DIFFICULTIES ENCOUNTERED WHICH COULD HAVE BEEN FORESEEN HAD AN EXAMINATION BEEN MADE, WILL NOT BE ALLOWED.
6. IT IS THE RESPONSIBILITY OF THE CONTRACTOR TO NOTIFY THE ARCHITECT OF ANY DISCREPANCIES ENCOUNTERED ON THE PLANS OR IN EXISTING SITE CONDITIONS PRIOR TO SUBMISSION OF BID.
7. COORDINATE WITH OTHER TRADES FOR ITEMS IN THEIR SCOPE OF WORK WHICH WOULD REQUIRE ELECTRICAL WORK (DISCONNECTION, RECONNECTION, ETC.) AND ARE NOT INDICATED ON ELECTRICAL DRAWINGS.

THESE NOTES APPLY TO ALL ELECTRICAL SHEETS.

2023 FLORIDA BUILDING CODE, ENERGY CONSERVATION (8TH EDITION)

SECTION C405.5 ELECTRIC POWER

C405.5.3 VOLTAGE DROP
THE CONDUCTORS FOR FEEDERS AND BRANCH CIRCUITS COMBINED ARE DESIGNED AND SIZED FOR A MAXIMUM OF 5% VOLTAGE DROP TOTAL.

C405.5.4.1 DRAWINGS
CONSTRUCTION DOCUMENTS SHALL REQUIRE THAT WITHIN 30 DAYS AFTER THE DATE OF SYSTEM ACCEPTANCE, RECORD DRAWINGS OF THE ACTUAL INSTALLATION SHALL BE PROVIDED TO THE BUILDING OWNER, INCLUDING:

1. A SINGLE-LINE DIAGRAM OF THE BUILDING ELECTRICAL DISTRIBUTION SYSTEM AND
2. FLOOR PLANS INDICATING LOCATION AND AREA SERVED FOR ALL DISTRIBUTION.

C405.5.4.2 MANUALS
CONSTRUCTION DOCUMENTS SHALL REQUIRE THAT AN OPERATING MANUAL AND MAINTENANCE MANUAL BE PROVIDED TO THE BUILDING OWNER. THE MANUALS SHALL INCLUDE, AT A MINIMUM, THE FOLLOWING:

1. SUBMITTAL DATA STATING EQUIPMENT RATING AND SELECTED OPTIONS FOR EACH PIECE OF EQUIPMENT REQUIRING MAINTENANCE.
2. OPERATION MANUALS AND MAINTENANCE MANUALS FOR EACH PIECE OF EQUIPMENT REQUIRING MAINTENANCE. REQUIRED ROUTINE MAINTENANCE ACTIONS SHALL BE CLEARLY IDENTIFIED.
3. NAMES AND ADDRESSES OF AT LEAST ONE QUALIFIED SERVICE AGENCY.

SECTION C408 SYSTEM COMMISSIONING

C408.3.1 FUNCTIONAL TESTING:

1. PRIOR TO PASSING FINAL INSPECTION, THE REGISTERED DESIGN PROFESSIONAL SHALL PROVIDE EVIDENCE THAT THE LIGHTING CONTROL SYSTEMS HAVE BEEN TESTED TO ENSURE THAT CONTROL HARDWARE AND SOFTWARE ARE CALIBRATED, ADJUSTED, PROGRAMMED AND IN PROPER WORKING CONDITION IN ACCORDANCE WITH THE CONSTRUCTION DOCUMENTS AND MANUFACTURER'S INSTRUCTIONS. FUNCTIONAL TESTING SHALL BE IN ACCORDANCE WITH SECTIONS C408.3.1.1 THROUGH C408.3.1.3 FOR THE APPLICABLE CONTROL TYPE.

C408.3.2 DOCUMENTATION REQUIREMENTS:

1. THE CONSTRUCTION DOCUMENTS SHALL SPECIFY THAT DOCUMENTS DESCRIBED IN THIS SECTION BE PROVIDED TO THE BUILDING OWNER'S AUTHORIZED AGENT WITHIN 90 DAYS FROM THE DATE OF RECEIPT OF THE CERTIFICATE OF OCCUPANCY.

N4OA

NOTES

GENERAL

1. REFER TO ARCHITECTURAL REFLECTED CEILING PLAN AND INTERIOR ELEVATIONS FOR COORDINATION OF LOCATIONS OF LIGHTING FIXTURES.
2. GROUND CONDUCTOR SHALL BE INSTALLED IN ENTIRE RACEWAY SYSTEM INCLUDING WALL SWITCHES AND FLEXIBLE CONDUIT TO LIGHT FIXTURES.
3. ALL TELEPHONE/DATA/VOICE JACKS AND CABLING TO BE PROVIDED AND INSTALLED BY OWNER'S VENDOR.
4. CONTRACTOR SHALL REFER TO INTERIOR ARCHITECTURAL DRAWINGS FOR FOR COORDINATION OF MOUNTING HEIGHTS AND/OR LOCATIONS OF AND WIRING DEVICES.
5. ELECTRICAL CONTRACTOR SHALL VERIFY AND COORDINATE ALL DEVICE TYPES, LOCATIONS AND QUANTITIES WITH OWNER'S REPRESENTATIVE AND PROVIDE ACCORDINGLY.
6. LIGHTING SWITCHES SHALL BE GROUPED WITH ONE PLATE AND LOCATED APPROXIMATELY 2 INCHES FROM DOOR FRAME (STRIKE SIDE) UNLESS OTHERWISE NOTED.
7. ALL EXPOSED CONDUIT SHALL BE RUN PARALLEL TO OR AT RIGHT ANGLES TO STRUCTURE.

N23B

LEGEND

ELECTRICAL

MOUNTING HEIGHTS SHOWN ARE MAXIMUM/MINIMUM HANDICAPPED ACCESSIBILITY STANDARDS - THEY SHALL NOT BE ALTERED WITHOUT WRITTEN AUTHORIZATION.

NOT ALL DEVICES SHOWN IN LEGEND ARE REQUIRED. REVIEW POWER AND LIGHTING PLANS AND DETAILS FOR ITEMS WHICH APPLY TO THIS PROJECT.

- A — LINEAR LIGHT FIXTURE, LETTER INDICATES TYPE
- B — DOWNLIGHT LIGHT FIXTURE, LETTER INDICATES TYPE
- C — WALL BRACKET LIGHT FIXTURE, LETTER INDICATES TYPE
- LIGHT FIXTURE ON EMERGENCY CIRCUIT/NIGHT LIGHT (NL)
- EXIT LIGHT (ARROW INDICATES DIRECTION)
- BATTERY POWERED EMERGENCY LIGHT
- (1) HEAD REMOTE EXTERIOR MOUNTED EMERGENCY LIGHT.
- (2) HEAD REMOTE EXTERIOR MOUNTED EMERGENCY LIGHT.
- a b — TRACK LIGHTING
- S^a — SINGLE POLE SWITCH, LOWER CASE LETTER INDICATES LIGHT CONTROLLED, MOUNT 48" A.F.F. U.O.N.
- S^2 — DOUBLE POLE SWITCH, MOUNT 48" A.F.F. U.O.N.
- S^3 — THREE-WAY SWITCH, MOUNT 48" A.F.F. U.O.N.
- S^4 — FOUR-WAY SWITCH, MOUNT 48" A.F.F. U.O.N.
- S^P — SINGLE POLE SWITCH WITH PILOT LIGHT, MOUNT 48" A.F.F. U.O.N.
- S^K — KEY OPERATED SINGLE POLE SWITCH, MOUNT 48" A.F.F. U.O.N.
- S^F — FAN CONTROLLER, MOUNT 48" A.F.F. U.O.N.
- S^D — DIMMER SWITCH, TYPE AS NOTED, MOUNT 48" A.F.F. U.O.N.
- INDUSTRIAL SPECIFICATION GRADE SINGLE RECEPTACLE, AMPS AS NOTED, MOUNT 18" A.F.F. U.O.N.
- INDUSTRIAL SPECIFICATION GRADE DUPLEX RECEPTACLE, MOUNT 18" A.F.F. U.O.N.
- INDUSTRIAL SPECIFICATION GRADE DUPLEX RECEPTACLE, MOUNT ABOVE COUNTER HEIGHT U.O.N.
- INDUSTRIAL SPECIFICATION GRADE QUADRAPLEX RECEPTACLE, MOUNT 18" A.F.F. U.O.N.
- INDUSTRIAL SPECIFICATION GRADE DUPLEX RECEPTACLE, HORIZONTALLY MOUNTED.
- 30A — 1 PH, 250V. RECEPTACLE, AMPS AS NOTED, MOUNT 18" A.F.F. U.O.N.
- H — SPECIAL RECEPTACLE AS NOTED
- INDUSTRIAL SPECIFICATION GRADE FLOOR MOUNTED DUPLEX RECEPTACLE
- GFI — INDUSTRIAL SPECIFICATION GRADE GROUND FAULT INTERRUPTER RECEPTACLE, LEVITON #6599-2-WT WEATHER & TAMPER RESISTANCE, MOUNT ABOVE COUNTER HEIGHT U.O.N.
- IG — INDUSTRIAL SPECIFICATION GRADE DUPLEX RECEPTACLE, ISOLATED GROUND TYPE, LEVITON #T5362-IG MOUNT AT 18" A.F.F. U.O.N.
- INDUSTRIAL SPECIFICATION GRADE DUPLEX RECEPTACLE, SPLIT WIRED, MOUNT 18" A.F.F. U.O.N.
- WPR — DUPLEX RECEPTACLE, WEATHER, TAMPER RESISTANCE AND GFI RATED, LEVITON #6592-WT, WITH WEATHERPROOF BOX AND COVER. MOUNT AT 18" A.F.F. U.O.N.
- USB — 20 AMP DUPLEX RECEPTACLE WITH (2) USB CHARGING PORTS, TAMPER & WEATHER RESISTANCE. HUBBELL #USB20AC5-xx-WR. MOUNT AT 18" A.F.F. U.O.N.
- TELE/DATA OUTLET, PROVIDE 4" SQ. BOX WITH 1-GANG MUD RING, AND 1" CONDUIT WITH PULL WIRE AND INSULATING BUSHING STUBBED INTO CEILING SPACE. MOUNT ABOVE COUNTER HEIGHT U.O.N.
- TELE/DATA OUTLET, PROVIDE 4" SQ. BOX WITH 1-GANG MUD RING, AND 1" CONDUIT WITH PULL WIRE AND INSULATING BUSHING STUBBED INTO CEILING SPACE. MOUNT BOX 18" A.F.F. U.O.N.
- TELE/DATA OUTLET, PROVIDE 4" SQ. BOX WITH 1-GANG MUD RING, AND 1" CONDUIT WITH PULL WIRE AND INSULATING BUSHING STUBBED INTO CEILING SPACE. MOUNT BOX 18" A.F.F. U.O.N.
- CONDUIT CONCEALED IN WALL OR ABOVE CEILING WITH CONDUCTORS AS SHOWN ON PANEL SCHEDULE. U.O.N.
- CONDUIT CONCEALED BELOW FLOOR SLAB OR FINISHED GRADE WITH CONDUCTORS AS SHOWN ON PANEL SCHEDULE U.O.N.
- CONDUIT EXPOSED ON WALL OR CEILING WITH CONDUCTORS AS SHOWN ON PANEL SCHEDULE. U.O.N.
- TV — TELEVISION SYSTEM EMPTY CONDUIT WITH PULL WIRE
- FX — FLEXIBLE CONDUIT NOT TO EXCEED 6 FEET IN LENGTH
- DC — D.C. VOLTAGE WIRING (#10 WIRE IN 1/2" CONDUIT)
- WIREMOLD (SIZE AND LENGTH AS NOTED)
- CONDUIT SEAL-OFF FITTING
- PADDLE FAN WITH BACKBOX CAPABLE OF SUPPORTING 100 LB. LOAD
- T.V. CAMERA
- TV — T.V. MONITOR
- TELEVISION OUTLET, PROVIDE SINGLE GANG BOX WITH 3/4" CONDUIT WITH PULL WIRE AND INSULATING BUSHING STUBBED INTO CEILING SPACE. MOUNT BOX 18" A.F.F. U.O.N.
- DISCONNECT SWITCH
- 100/3/80 — DISCONNECT DESIGNATION (SIZE/POLES/FUSE) "NF" INDICATES NON-FUSED; "DE" INDICATES DUAL ELEMENT FUSES.
- MAGNETIC MOTOR STARTER
- COMBINATION MAGNETIC MOTOR STARTER/DISCONNECT SWITCH
- T — DRY TYPE TRANSFORMER
- LVC — CONTACTOR (AS NOTED)
- TVC — TIME CLOCK
- PVC — PHOTOCELL
- MOTOR PERMANENTLY CONNECTED WITH FLEXIBLE CONDUIT
- ELECTRIC DUCT HEATER
- T — THERMOSTAT. PROVIDE SINGLE GANG BOX WITH 1/2" CONDUIT STUBBED INTO CEILING SPACE. MOUNT 60" A.F.F. U.O.N. (COORDINATE WITH MECHANICAL DRAWINGS PRIOR TO ROUGH-IN)
- PUSHBUTTON, MOUNT 48" A.F.F. U.O.N.
- DOOR CHIME WITH TRANSFORMER
- S — SPEAKER
- J — JUNCTION BOX (FLUSH MOUNT IN FINISHED AREAS U.O.N.)
- DEVICE AS NOTED
- TELEPHONE BACKBOARD WITH #6 CU. GROUND (SIZE AS NOTED)
- 277/480V, 3-PHASE PANELBOARD
- LIGHTING OR POWER PANELBOARD
- FLOOR MOUNTED TELEPHONE RECEPTACLE
- MSB — MAIN SWITCHBOARD
- MDP — MAIN DISTRIBUTION PANEL

ABBREVIATIONS

E.G.	EQUIPMENT GROUND	EWC	ELECTRIC WATER COOLER	N.L.	NIGHT LIGHT	A.F.G.	ABOVE FINISH GRADE
I.G.	ISOLATED GROUND	E/F-EF	EXHAUST FAN	PC	PULL CHAIN	U.O.N.	UNLESS OTHERWISE NOTED
WP	WEATHERPROOF	A/H-AHU	AIR HANDLING UNIT	C.T.	CURRENT TRANSFORMER	N.T.S.	NOT TO SCALE
EC	EMPTY CONDUIT	ACC-CU	CONDENSING UNIT	EX	EXISTING DEVICE	N.I.C.	NOT IN CONTRACT
EWH	ELECTRIC WATER HEATER	RTU	ROOF TOP UNIT	RL	EXISTING TO BE RELOCATED	A.F.F.	ABOVE FINISH FLOOR
GFI/GFCI	GROUND FAULT CIRCUIT INTERRUPTER						

NOTE: MOUNTING HEIGHTS NOTED ARE TO CENTERLINE OF DEVICE SHOWN. U.O.N.

INDEX

SHEET

E001 : ELECTRICAL NOTES AND LEGEND
E100 : ELECTRICAL SITE PLAN
E101 : PHOTOMETRIC SITE PLAN
E102 : FIXTURE INFORMATION
E200: ELECTRICAL PLAN
E300: POWER RISER DIAGRAM
E400: ELECTRICAL SPECIFICATIONS

CHEHAYEB & ASSOCIATES, INC.
CONSULTING PROFESSIONAL ENGINEERS
3702 AZEELE ST. TAMPA, FL 33609
(813) 876-1415 www.chehayeb.com
LIC. #49521 SOUHEIL S. CHEHAYEB CERT. #7340
25-62

FWH Architects
3336 Grand Blvd. Suite 201
Holiday, Florida 34690
Ph. 727. 815. 3336
FABER@FWHARCHITECTS.COM

brightwork real estate
3708 WEST SWANN AVE.
SUITE 200
TAMPA, FL 33609
PHONE: 813.874.1700

TO THE BEST OF THE KNOWLEDGE OF THE ARCHITECTS AND ENGINEERS, PLANS AND SPECIFICATIONS COMPLY WITH THE APPLICABLE MINIMUM BUILDING CODES AND THE APPLICABLE MINIMUM FIRE SAFETY STANDARDS

SOUHEIL CHEHAYEB, P.E.
FL License No. 49521

no.	date	revision descriptions

CHIPOTLE MEXICAN GRILL
BUILDING SHELL
NOLTE RD. AND KYRST RUN
ST. CLOUD, FLORIDA

08.29.2025
date

25008
comm. no.

ELECTRICAL NOTES AND LEGEND

E001

Name: Garrison DSI Printed Date: 8/29/2025 1:36 PM

UTILITY COORDINATION:

TO THE BEST OF OUR ABILITY THE SERVICE HAS BEEN COORDINATED WITH THE UTILITY COMPANY REPRESENTATIVE(S) FOR:

1 - TRANSFORMER(S) LOCATION.
2 - CUSTOMER RESPONSIBILITY.
3 - REQUESTED VOLTAGE & AVAILABILITY.
4 - MEETING REQUIREMENTS.

IT IS THE CONTRACTOR RESPONSIBILITY TO REVISIT THESE ITEMS WITH UTILITY PROJECT ENGINEER TO VERIFY THAT THE CURRENT DESIGN SHOWN ON THE CONSTRUCTION DOCUMENT(S) ARE STILL IN COMPLIANCE WITH THE UTILITY PLANS TO SERVICE THIS SITE.

ANY COST ASSOCIATED WITH UTILITY FEES SHALL BE THE RESPONSIBILITY OF THE CONTRACTOR TO ADDRESS WITH THE DEVELOPER.

THIS COORDINATION SHALL BE A PART OF SITE MEETING TO BE SCHEDULED BY THE CONTRACTOR WITH THE UTILITY PERSONNEL PRIOR TO THE START OF THE PROJECT.

COORDINATION SHALL ALSO BE MADE WITH TELEPHONE AND CABLE SERVICE REPRESENTATIVE(S) FOR VERIFICATION OF THEIR REQUIREMENTS INCLUDING POINT OF CONNECTION AND TERMINATION POINTS.

N55

GENERAL SITE NOTES

1. CONDUIT RUN BELOW GRADE SHALL BE PVC SCHEDULE 40. RISERS SHALL BE RIGID STEEL CONDUIT(S) WHERE EXPOSED TO OUTSIDE ELEMENTS. SEE "ELECTRICAL MATERIAL SCHEDULE" SHEET E200.
2. ALL UNDERGROUND SITE CONDUIT SHALL BE BURIED A MINIMUM OF 36 INCHES DEEP BELOW FINISHED GRADE TO TOP OF CONDUIT UNLESS OTHERWISE NOTED.
3. PROVIDE COLOR TAPE FOR IDENTIFICATION AT 18 INCHES DEEP (ABOVE SERVICE CONDUIT RUNS) PER N.E.C. 300-5 (D) (3).
4. ALL TURNS SHALL BE MADE WITH LONG SWEEP ELLS.
5. CONTRACTOR SHALL PROVIDE ALL EXCAVATING AND BACK FILLING REQUIRED FOR ALL NEW WORK INCLUDING FILL, COMPACTION, SURFACE, ETC. TO MEET ALL REQUIREMENTS AS APPLICABLE FOR THE AREA.
6. PRIOR TO THE START OF CONSTRUCTION, CONTRACTOR SHALL DETERMINE THE PRESENCE AND LOCATION OF ANY UNDERGROUND RACEWAY'S SUCH AS TELEPHONE, ELECTRIC POWER, WATER, GAS, SEWAGE LINES, ETC. WHETHER PREVIOUSLY EXISTING OR AS INSTALLED BY OTHER TRADES, TO AVOID INTERFERENCE WITH ANY SUCH SYSTEM.
7. ALL SPARE, EMPTY CONDUITS SHALL BE LABELED AS TO THEIR FUNCTION.
8. CONTRACTOR SHALL MAINTAIN AN AS-BUILT DIMENSIONAL DRAWING ON SITE SHOWING ALL UNDERGROUND SERVICE ROUTING AND TERMINATION POINTS.
9. CONTRACTOR SHALL MEET ON SITE WITH REPRESENTATIVES OF THE UTILITY COMPANIES INCLUDING POWER, TELEPHONE, AND CABLE TO DETERMINE THE FOLLOWING: (PRIOR TO BID AND PRIOR TO ROUGH IN).

POWER COMPANY:
A - VERIFY EXACT TRANSFORMER(S) LOCATION PRIOR TO BID.
B - VERIFY PRIMARY CONDUIT WORK REQUIRED AND RESPONSIBILITY PRIOR TO BID.
C - VERIFY METERING METHOD AND REQUIREMENTS, IF DIFFERENT FROM WHAT IS SHOWN ON THE DRAWINGS, NOTIFY ENGINEER IMMEDIATELY.

TELEPHONE COMPANY:
A - ORIGINATION AND TERMINATION OF THE SERVICE CONDUITS.
B - INSTALLATION SPECIFICATIONS, SIZE AND QUANTITY REQUIRED. HOWEVER; MAINTAIN QUANTITY AND SIZES SHOWN ON PLANS, IF IN EXCESS OF UTILITY REQUIREMENTS.

NOTE:
CONTRACTOR'S FAILURE TO COMPLY WITH THESE COORDINATION PROCEDURES WILL CONSTITUTE THE CONTRACTOR ASSUMING ALL COSTS ASSOCIATED WITH REPLACING ANY AND ALL WORK ALREADY IN PLACE TO MEET UTILITY COMPANIES' RULES AND REQUIREMENTS.

N88

KEY NOTES

1. NEW PAD MOUNTED 120/208V., 3-PHASE TRANSFORMER. FIELD VERIFY EXACT LOCATION PRIOR TO BID AND/OR ROUGH IN. SEE SHEET E300 FOR ADDITIONAL INFORMATION.
2. SECONDARY FEEDERS BY ELECTRICAL CONTRACTOR. SEE POWER RISER DIAGRAM ON SHEET E300.
3. ELECTRIC SERVICE, INCLUDING METER AND DISCONNECT MOUNTED OUTSIDE REAR OF THE BUILDING. SEE RISER ON SHEET E300.
4. PROVIDE TWO 2" SCHEDULE 40, EMPTY CONDUITS WITH PULL WIRE FOR TELEPHONE/DATA. TERMINATE AT PROPERTY LINE PER UTILITY COMPANY DIRECTION.
5. TELEPHONE AND CABLE T.V. SERVICE CONDUITS. COORDINATE EXACT LOCATION WITH INTERIOR TI PLANS PRIOR TO ROUGH-IN.
6. POLE SIGN. SEE NOTE #5 UNDER "SITE CONDUIT DETAIL" THIS SHEET.
7. 4-#8, 1-#8 E.G. IN 1" CONDUIT.
8. STUB-UP AT CHIPOTLE PROPOSED LINE VOLTAGE J-BOX INSIDE THE BUILDING. COIL AND TAPE 5'-0" OF CONDUCTORS FOR FUTURE TIE-IN TO CHIPOTLE PANEL UNDER TI DOCUMENTS.
9. PROVIDE 2" EMPTY CONDUIT WITH PULL STRINGS RUN THROUGH THE FOUNDATION WALL AT THE REAR OF THE BUILDING, CAPPED AND TERMINATED ABOVE THE CEILING. VERIFY LOCATION FOR STUB UP WITH HE TENANT REPRESENTATIVE PRIOR TO ROUGH IN.
10. LIT CLEARANCE BAR. SEE NOTE #4 UNDER "SITE CONDUIT DETAIL" THIS SHEET.
11. ~~LIT DIRECTIONAL SIGN. SEE NOTE #5 UNDER "SITE CONDUIT DETAIL" THIS SHEET.~~
12. FIXTURE OPTICS ORIENTATION. COORDINATE WITH THE FIXTURE MANUFACTURER FOR PROPER ORIENTATION PRIOR TO FINAL INSTALLATION.
13. ~~PROVIDE CONDUIT WITH PULL WIRE FOR PATIO POST LIGHTS. SEE NOTE #6 UNDER "SITE CONDUIT DETAIL" THIS SHEET.~~
14. VEHICLE DETECTOR LOOP. SEE NOTES #1 & #2 UNDER "SITE CONDUIT DETAIL" THIS SHEET.
15. 1" SPARE CONDUIT FOR LOW VOLTAGE. SEE NOTE #9 UNDER "SITE CONDUIT DETAIL" THIS SHEET.
16. 1" SPARE CONDUIT FOR LINE VOLTAGE. SEE NOTE #10 UNDER "SITE CONDUIT DETAIL" THIS SHEET.
17. INTERIOR J-BOXES AT 11'-0" A.F.F. FOR LINE VOLTAGE AND LOW VOLTAGE SITE WIRING. SEE NOTES #7 & #8 UNDER "SITE CONDUIT DETAIL" THIS SHEET.
18. SITE LIGHTING POLE. SEE DETAIL SHEET E101.
19. 2-#8, 1-#8 E.G. IN 1" CONDUIT.
20. 1" CONDUIT WITH PULL WIRE FROM "ANNOUNCE SIGN" LOCATION. SEE NOTE #3 UNDER "SITE CONDUIT DETAIL" THIS SHEET.
21. LIGHT FIXTURE MOUNTED AT 6" BELOW THE TOP OF TRASH ENCLOSURE WALL. SEE FIXTURE SCHEDULE FOR SPECIFICATION. SEE ARCHITECTURAL DUMPSTER ELEVATION FOR EXACT LOCATION OF LIGHT FIXTURE. FIXTURE SHALL BE CONNECTED FROM THE END TO MAINTAIN WET LABEL LISTING OF THE FIXTURE. CONSULT FACTORY FOR WIRING DETAIL AND PROVIDE ACCORDINGLY.

GENERAL NOTE:

COORDINATE ALL TENANT'S SITE CONDUITS FOR DRIVE EQUIPMENT, SIGNS, DIRECTIONAL SIGNS, ETC... WITH PROJECT MANAGER ON SITE PRIOR TO ROUGH-IN.

UTILITY CONTACTS

POWER COMPANY: OUC
CONTACT: KATHERINE FARINAS
TELEPHONE No. (407) 434-2322
EMAIL ADDRESS: kfarinas@ouc.com
WORK ORDER NO. 918447/919855

TELEPHONE COMPANY: LUMEN
CONTACT: JASON CASTILLO-REYES
TELEPHONE No. -
EMAIL ADDRESS: jason.castilloreyes@lumen.com

UTILITY COORDINATION DUE-DILIGENCE PROGRESS:

CONTACT HAS BEEN MADE WITH THE UTILITY COMPANY. HOWEVER, NO DESIGN OR POINT OF CONNECTION HAS BEEN VERIFIED WITH THE SAME. THEREFORE, THE CONTRACTOR SHALL CONTACT THE POWER COMPANY FOR MORE INFORMATION REGARDING THE DESIGN SHOWN IN THE PLANS, INCLUDING ANY PERTINENT INFORMATION REGARDING METERING, PRIMARY SERVICE CONDUIT RESPONSIBILITY, SOURCE OF POWER, VOLTAGE ETC.. PRIOR TO SUBMITTING A BID OR QUALIFY THAT IN THE BASE BID TO THE G.C..

THE SAME IS TRUE FOR THE TELE/DATA SERVICES. HOWEVER, THE CONDUIT(S) SHOWN IN THIS DOCUMENT SHALL BE THE MINIMUM(S) AND QUANTITY ALLOWED. THE MAIN COORDINATION WITH THE UTILITY COMPANY, REGARDING TELE/DATA, IS THE DESTINATION POINT AND ANY SPECIAL REQUIREMENTS NOT SHOWN IN THIS DOCUMENT.

N59

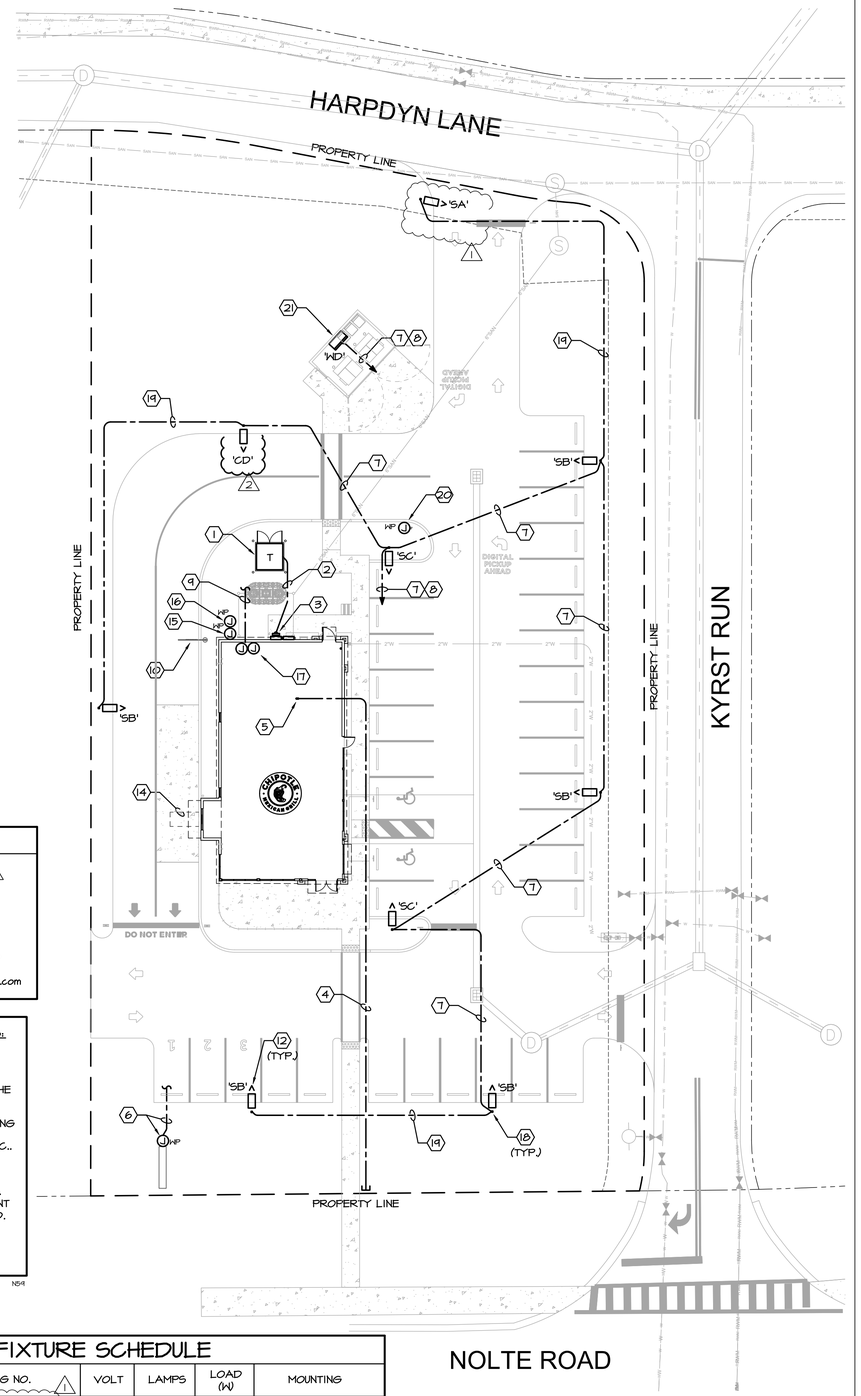

NORTH

ELECTRICAL SITE PLAN

SCALE: 1" = 20'-0"

SITE CONDUIT DETAIL

N.T.S.

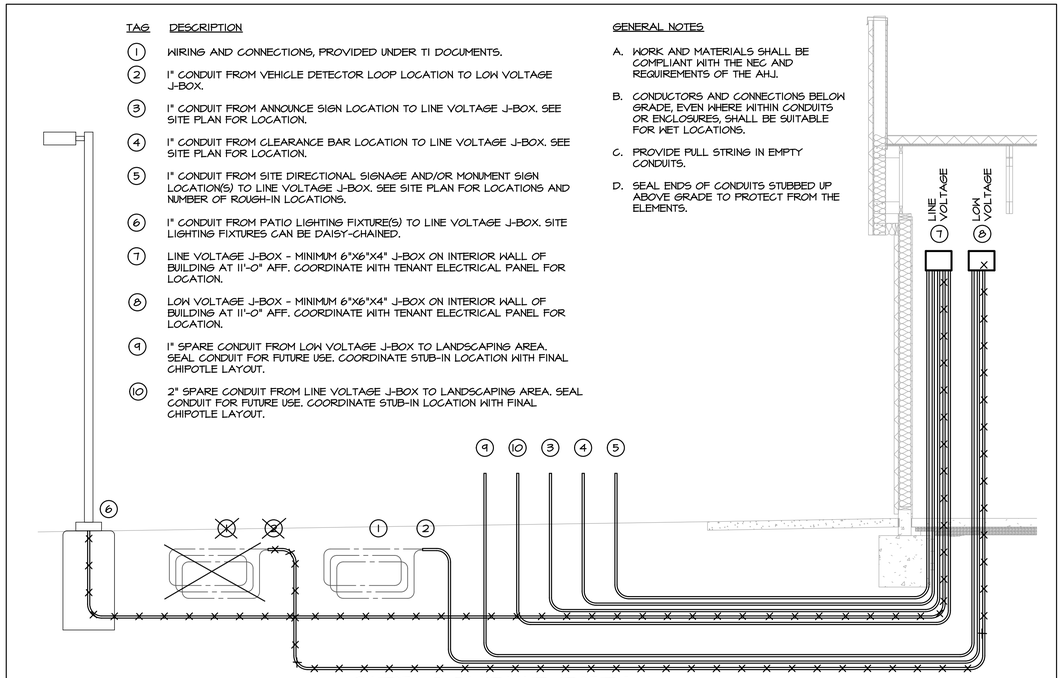

TAG	DESCRIPTION
1	WIRING AND CONNECTIONS, PROVIDED UNDER TI DOCUMENTS.
2	1" CONDUIT FROM VEHICLE DETECTOR LOOP LOCATION TO LOW VOLTAGE J-BOX.
3	1" CONDUIT FROM ANNOUNCE SIGN LOCATION TO LINE VOLTAGE J-BOX. SEE SITE PLAN FOR LOCATION.
4	1" CONDUIT FROM CLEARANCE BAR LOCATION TO LINE VOLTAGE J-BOX. SEE SITE PLAN FOR LOCATION.
5	1" CONDUIT FROM SITE DIRECTIONAL SIGNAGE AND/OR MONUMENT SIGN LOCATION(S) TO LINE VOLTAGE J-BOX. SEE SITE PLAN FOR LOCATIONS AND NUMBER OF ROUGH-IN LOCATIONS.
6	1" CONDUIT FROM PATIO LIGHTING FIXTURE(S) TO LINE VOLTAGE J-BOX. SITE LIGHTING FIXTURES CAN BE DAISY-CHAINED.
7	LINE VOLTAGE J-BOX - MINIMUM 6"X6"X4" J-BOX ON INTERIOR WALL OF BUILDING AT 11'-0" AFF. COORDINATE WITH TENANT ELECTRICAL PANEL FOR LOCATION.
8	LOW VOLTAGE J-BOX - MINIMUM 6"X6"X4" J-BOX ON INTERIOR WALL OF BUILDING AT 11'-0" AFF. COORDINATE WITH TENANT ELECTRICAL PANEL FOR LOCATION.
9	1" SPARE CONDUIT FROM LOW VOLTAGE J-BOX TO LANDSCAPING AREA. SEAL CONDUIT FOR FUTURE USE. COORDINATE STUB-IN LOCATION WITH FINAL CHIPOTLE LAYOUT.
10	2" SPARE CONDUIT FROM LINE VOLTAGE J-BOX TO LANDSCAPING AREA. SEAL CONDUIT FOR FUTURE USE. COORDINATE STUB-IN LOCATION WITH FINAL CHIPOTLE LAYOUT.

GENERAL NOTES

A. WORK AND MATERIALS SHALL BE COMPLIANT WITH THE NEC AND REQUIREMENTS OF THE AHJ.
B. CONDUCTORS AND CONNECTIONS BELOW GRADE, EVEN WHERE WITHIN CONDUITS OR ENCLOSURES, SHALL BE SUITABLE FOR WET LOCATIONS.
C. PROVIDE PULL STRING IN EMPTY CONDUITS.
D. SEAL ENDS OF CONDUITS STUBBED UP ABOVE GRADE TO PROTECT FROM THE ELEMENTS.

LIGHTING FIXTURE SCHEDULE

SITE

TYPE	MANUFACTURER	CATALOG NO.	VOLT	LAMPS	LOAD (W)	MOUNTING
SA	LITHONIA	DSXI-LED-P2-40K-70CRI-LCCO-MVOLT	208	LED	68	SEE POLE DETAIL ON SHEET E101
SB	LITHONIA	DSXI-LED-P3-40K-70CRI-BLC3-MVOLT	208	LED	103	
SC	LITHONIA	DSXI-LED-P2-40K-70CRI-TFTM-MVOLT-HS	208	LED	68	
CD	LITHONIA	DSXI-LED-P5-40K-70CRI-T5M-MVOLT	208	LED	139	
WD	LITHONIA	DSXWI-P3-40K-70CRI-T4M-MVOLT-PIRIFC3V-CBA	120	LED	22	DUMPSTER WALL (SEE KEY NOTE #21)

GENERAL NOTES:

1. PROVIDE NECESSARY MOUNTING HARDWARE AND ACCESSORIES FOR ALL FIXTURES.
2. ALL FIXTURE SUBSTITUTIONS MUST BE SUBMITTED FOR APPROVAL (EQUALS ONLY).
3. FIXTURE AND POLE FINISH COLOR AS SELECTED BY ARCHITECT.
4. CBA = COLOR OR FINISH AS SELECTED BY ARCHITECT.

CHEHAYEB & ASSOCIATES, INC.
CONSULTING PROFESSIONAL ENGINEERS
3702 AZEELE ST. TAMPA, FL 33609
(813) 876-1415 www.chehayeb.com
LIC. #49521 SOUHEIL S. CHEHAYEB CERT. #7340
25-62

FWH Architects
3336 Grand Blvd. Suite 201
Holiday, Florida 34690
Ph. 727. 815. 3336
FABER@FWHARCHITECTS.COM

brightwork real estate
3708 WEST SWANN AVE. SUITE 200
TAMPA, FL 33609
PHONE: 813.874.1700

TO THE BEST OF THE KNOWLEDGE OF THE ARCHITECTS AND ENGINEERS, PLANS AND SPECIFICATIONS COMPLY WITH THE APPLICABLE MINIMUM BUILDING CODES AND THE APPLICABLE MINIMUM FIRE SAFETY STANDARDS

SOUHEIL CHEHAYEB, P.E.
FL License No. 49521

no.	date	revision descriptions
1	11.21.2025	REV/SED PER SITE PERMIT COMMENTS
2	12.02.2025	REV/SED PER COORDINATION W/ TENANT INTERIORS

CHIPOTLE MEXICAN GRILL BUILDING SHELL
NOLTE RD. AND KYRST RUN
ST. CLOUD, FLORIDA

08.29.2025
date

25008
comm. no.

ELECTRICAL SITE PLAN

E100

Name: Garrison DSI Printed Date: 11/26/2025 8:38 AM

DETAIL

CONCRETE POLE

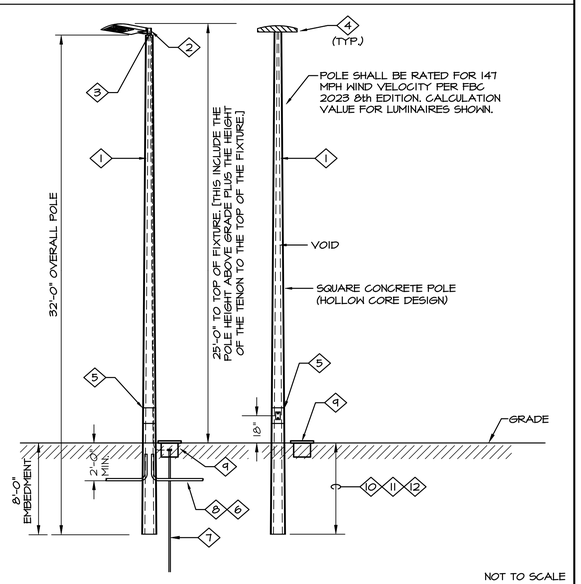

NOT TO SCALE

NOTES:

1. DIRECT BURIAL POLE SHALL BE RATED FOR WIND VELOCITY PER FBC 2023 8th EDITION. CALCULATION SHALL BE BASED ON THE EPA VALUE FOR THE LUMINAIRE SHOWN PER POLE.
2. ELECTRICAL CONTRACTOR TO COORDINATE THE TYPE OF TENON OR MOUNTING REQUIRED WITH THE FIXTURE MANUFACTURER, TO MOUNT THE SITE LIGHT FIXTURE TO THE POLE AS INTENDED AND INDICATED.
3. NO. 6 GROUND CONDUCTOR, FURNISHED WITH THE POLE, BONDED AT THE J BOX AT THE BOTTOM OF THE POLE, SEE NOTE #9, AND TO THE EQUIPMENT GROUND CONDUCTOR RAN WITH THE CIRCUIT FROM THE DESIGNATED PANEL IN THE BUILDING.
4. LUMINAIRE. SEE FIXTURE SCHEDULE ON THE SITE LIGHTING PLAN FOR QUANTITY, TYPE, AND OPTIC ORIENTATION. PROVIDE PROPER BRACKETS TO MOUNT THE FIXTURE AS SHOWN ON THE PHOTOMETRIC PLAN. COORDINATE WITH THE FACTORY AND PROVIDE BRACKET CUT SHEET TO THE ENGINEER FOR APPROVAL PRIOR TO RELEASE.
5. HAND HOLE AT 18" A.F.G.
6. CONDUIT, EXTEND TO PULL BOX OR NEXT POLE AS REQUIRED.
7. 3/4" x 10'-0" COPPER CLAD GROUND ROD FOR LIGHTNING PROTECTION. CONNECTION TO THE GROUND ROD SHALL BE MADE VIA A U.L. LISTED MECHANICAL CONNECTION.
8. SEE ELECTRICAL SITE PLAN FOR CONDUIT AND WIRE SIZES AND DESTINATION PANEL. WIRE SIZE UP THE POLE SHALL BE SAME SIZE FEEDING THE POLE.
9. PROVIDE FLUSH IN GRADE 4"x12" LONG PVC SCHEDULE 80 PIPE. PIPE SHALL HAVE A FEMALE ADAPTER WITH SCREW IN COVER ON ONE END. PIPE SHALL BE USED FOR GROUND ROD CONNECTION INSPECTION WELL. LOCATED BEHIND THE BASE OF THE POLE IN A PROTECTED AREA.
10. DEPTH OF THE EMBEDMENT OF THE POLE SHALL BE AS RECOMMENDED BY POLE MANUFACTURER TO MEET REQUIRED WIND LOADING. MINIMUM EMBEDMENT SHALL NOT BE LESS THAN 8'-0", OR AS LISTED IN NOTE #11 BELOW, WHICHEVER IS MORE STRINGENT.
11. PROVIDE EMBEDMENT LENGTH DESIGN, SIGNED AND SEALED BY A FLORIDA CERTIFIED STRUCTURAL ENGINEER, THAT MEETS THE REQUIRED WIND SPEED AS A MINIMUM, BASED ON POLE HEIGHT, FIXTURES EPA RATING, AND SITE SOIL CONDITIONS WITH ESTIMATED PASSIVE PRESSURE OF 200 PCF.
12. POLE SHALL BE INSTALLED AS FOLLOWS:
    A. USE MINIMUM AUGER SIZE POSSIBLE BASED ON POLE BUTT SIZE TO MINIMIZE DISTURBANCE OF ADJACENT SOIL.
    B. PROVIDE 6" COURSE GRANULAR BASE PAD AT BOTTOM OF POLE.
    C. BACK FILL AND COMPACT, IN 6" LIFTS, TO 90% OF EXISTING SOIL VALUE.
    D. USE CLEAN SOIL FOR COMPACTION.

2
1

Statistics

Description	Symbol	Avg	Max	Min	Max/Min	Avg/Min
1. PROPERTY LINES	+	0.4 fc	1.0 fc	0.0 fc	N/A	N/A
2. OVERALL PARCEL	+	1.7 fc	4.3 fc	0.0 fc	N/A	N/A
3. PAVED AND DRIVE AREAS	X	2.7 fc	4.3 fc	1.0 fc	4.3:1	2.7:1
4. DUMPSTER AREA	+	3.6 fc	5.7 fc	2.2 fc	2.6:1	1.6:1
5. PATIO AREA	+	5.5 fc	6.2 fc	4.8 fc	1.3:1	1.1:1
6. DRIVE THRU AREA	+	5.7 fc	7.1 fc	4.3 fc	1.7:1	1.3:1
7. LOADING AREA	+	3.2 fc	3.9 fc	2.4 fc	1.6:1	1.3:1

Luminaire Locations

		Location						Aim		
No.	Label	X	Y	Z	MH	Orientation	Tilt	X	Y	Z
1	CD	1191.43	701.37	25.00	25.00	180.00	0.00	1191.43	698.62	0.00
2	SA	1240.90	764.67	25.00	25.00	101.50	0.00	1243.59	764.12	0.00
1	SB	1193.72	509.48	25.00	25.00	0.00	0.00	1193.72	512.23	0.00
2	SB	1260.95	509.57	25.00	25.00	0.00	0.00	1260.95	512.32	0.00
4	SB	1291.23	691.55	25.00	25.00	270.00	0.00	1288.48	691.55	0.00
5	SB	1291.23	598.84	25.00	25.00	270.00	0.00	1288.48	598.84	0.00
6	SB	1150.99	622.42	25.00	25.00	90.00	0.00	1153.74	622.42	0.00
1	SC	1232.98	560.47	25.00	25.00	0.00	0.00	1232.98	563.22	0.00
2	SC	1232.08	667.26	25.00	25.00	180.00	0.00	1232.08	664.51	0.00
1	WA	1190.86	573.99	11.50	11.50	180.00	0.00	1190.86	573.49	0.00
2	WA	1202.31	574.03	11.50	11.50	180.00	0.00	1202.31	573.53	0.00
1	WB	1179.63	586.75	8.00	8.00	270.00	0.00	1179.13	586.75	0.00
2	WB	1179.63	595.72	8.00	8.00	270.00	0.00	1179.13	595.72	0.00
1	WC	1206.43	641.58	10.00	10.00	0.00	0.00	1206.43	642.08	0.00
1	WD	1216.65	726.53	7.80	7.80	132.74	0.00	1217.01	726.19	0.00

Surface Schedule

	Reflectance		Normal			
Name	Front	Back	X	Y	Z	Area(ft2)
Solid						
Bottom	0%	0%	0.00	0.00	-1.00	2420.46
Side 1	0%	0%	-1.00	0.00	0.00	329.36
Side 2	0%	0%	0.00	-1.00	0.00	142.22
Side 3	0%	0%	-1.00	0.00	0.00	351.81
Side 4	0%	0%	0.00	1.00	0.00	145.96
Side 5	0%	0%	-1.00	0.00	0.00	1336.14
Side 6	0%	0%	0.00	1.00	0.00	1047.95
Side 7	0%	0%	1.00	0.00	0.00	2028.53
Side 8	0%	0%	0.00	-1.00	0.00	1047.95
Side 9	0%	0%	-0.95	-0.32	0.00	11.84
Top	0%	0%	0.00	0.00	1.00	2420.46
Solid						
	10%	10%	-0.74	0.67	0.00	156.12
	10%	10%	-0.68	-0.73	0.00	115.84
	10%	10%	0.73	-0.68	0.00	157.54
	10%	10%	0.67	0.74	0.00	117.72

Schedule

Symbol	Label	QTY	Catalog Number	Description	Number Lamps	Filename	Lumens per Lamp	LLF	Wattage	Efficiency
	SA	1	DSX1 LED P2 40K 70CRI LCCO MVOLT 1	D-Series Size 1 Area Luminaire P2 Performance Package 4000K CCT 70 CRI Right Corner Cutoff Extreme Backlight Control	1	DSX1_LED_P2_40K_70CRI_RCCO.ies	7165	0.95	67.79	100%
	SB	5 2	DSX1 LED P3 40K 70CRI BLC3 MVOLT	D-Series Size 1 Area Luminaire P3 Performance Package 4000K CCT 70 CRI Type 3 Extreme Backlight Control	1	DSX1_LED_P3_40K_70CRI_BLC3.ies	10011	0.95	102.17	100%
	SC	2	DSX1 LED P2 40K 70CRI TFTM MVOLT HS	D-Series Size 1 Area Luminaire P2 Performance Package 4000K CCT 70 CRI Forward Throw Houseside Shield	1	DSX1_LED_P2_40K_70CRI_TFTM_HS.ies	8367	0.95	67.7927	100%
2	CD	1	DSX1 LED P5 40K 70CRI T5M MVOLT	D-Series Size 1 Area Luminaire P5 Performance Package 4000K CCT 70 CRI Type 5 Medium	1	DSX1_LED_P5_40K_70CRI_T5M.ies	18410	0.95	138.16	100%
	WA	2	DSXW1 P4 30K 80CRI T4M MVOLT	5000 3000K 80CRI Type 4 Medium	1	DSXW1_P4_30K_80CRI_T4M.ies	3663	0.95	28.68	100%
	WB	2	WDGE1 LED P0 30K 80CRI VW MVOLT	WDGE1 LED WITH P0 - PERFORMANCE PACKAGE, 3000K, 80CRI, VISUAL COMFORT WIDE OPTIC	1	WDGE1_LED_P0_30K_80CRI_VW.ies	720	0.95	6.7947	100%
	WC	1	DSXW1 P1 30K 70CRI T2M MVOLT	2000 3000K 70CRI Type 2 Medium	1	DSXW1_P1_30K_T2M.ies	1838	0.95	12.37	100%
	WD	1	DSXW1 P3 40K 70CRI T4M MVOLT PIRIFC3V	4000 4000K 70CRI Type 4 Medium	1	DSXW1_P3_40K_T4M.ies	3240	0.95	21.05	100%

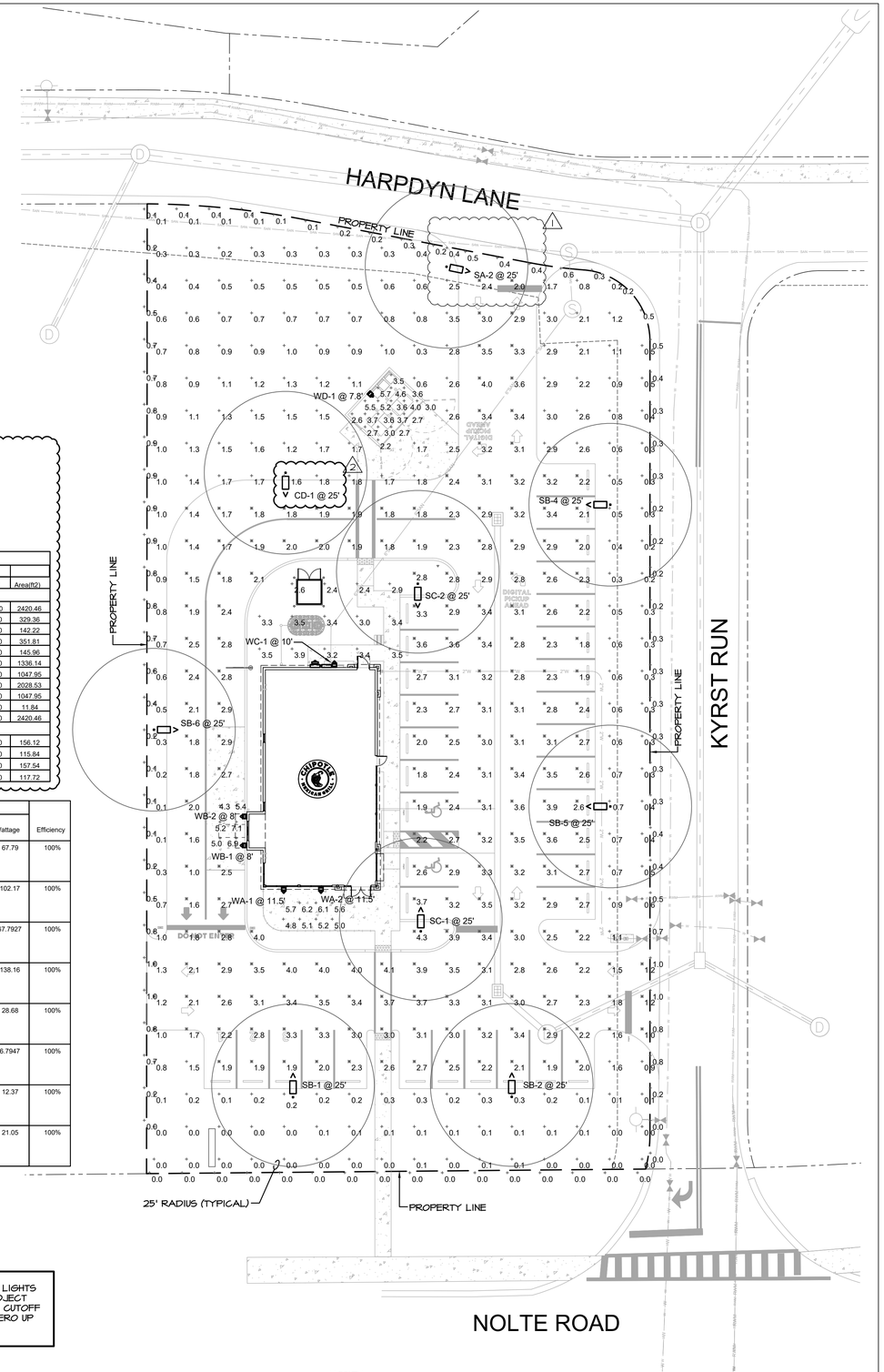

ALL SITE AND BUILDING LIGHTS PROPOSED ON THIS PROJECT ARE DESIGNED AS FULL CUTOFF CLASSIFICATION WITH ZERO UP LIGHT COMPONENTS.

FIXTURE NOTE:

FIXTURE SHOWN ON THIS SHEET IS FOR REFERENCE ONLY. SEE ACTUAL FIXTURE SCHEDULE ELSE WHERE IN THIS DOCUMENTS FOR ACTUAL CATALOG NUMBER AND DESCRIPTION.

N&O

THESE PHOTOMETRICS ARE INTENDED FOR DESIGN AND EVALUATION PURPOSES ONLY. THE POINT-BY-POINT SHOWN IS BASED ON A COMPUTER LIGHTING PROGRAM WITH APPROXIMATED PARAMETERS. THEREFORE, THESE PHOTOMETRICS MAY VARY FROM ACTUAL FIELD CONDITIONS.

100%

NORTH

PHOTOMETRIC SITE PLAN

SCALE: 1" = 20'-0"

CHEHAYEB & ASSOCIATES, INC.
CONSULTING PROFESSIONAL ENGINEERS
3702 AZEELE ST. TAMPA, FL 33609
(813) 876-1415 www.chehayeb.com
LIC. #49521 SOUHEIL S. CHEHAYEB CERT. #7340
25-62

FWH Architects
3336 Grand Blvd. Suite 201
Holiday, Florida 34690
Ph. 727. 815. 3336
FABER@FWHARCHITECTS.COM

brightwork real estate
3708 WEST SWANN AVE.
SUITE 200
TAMPA, FL 33609
PHONE: 813.874.1700

TO THE BEST OF THE KNOWLEDGE OF THE ARCHITECTS AND ENGINEERS, PLANS AND SPECIFICATIONS COMPLY WITH THE APPLICABLE MINIMUM BUILDING CODES AND THE APPLICABLE MINIMUM FIRE SAFETY STANDARDS

SOUHEIL CHEHAYEB, P.E.
FL License No. 49521

no.	date	revision descriptions
1	11.21.2025	REVISED PER SITE PERMIT COMMENTS
2	12.02.2025	REVISED PER COORDINATION W/ TENANT INTERIORS

CHIPOTLE MEXICAN GRILL BUILDING SHELL

NOLTE RD. AND KYRST RUN
ST. CLOUD, FLORIDA

08.29.2025
date

25008
comm. no.

PHOTOMETRIC SITE PLAN

E101

Name: Garrison DSI Printed Date: 11/26/2025 8:30 AM

LITHONIA LIGHTING®

Catalog Number	AFF OEL (CBA) UVOLT LTP SDRT FCT
Notes	
Type	'EM'

FEATURES & SPECIFICATIONS

Signature — Premium Die-Cast Architectural Emergency Light

AFF

INTENDED USE — Ideal for applications requiring low-profile, attractive emergency lighting with Optional normally-off or normally-on with photocell control. Provides a minimum of 90 minutes of illumination both indoors and outdoors upon loss of AC power. **Certain airborne contaminants can diminish the integrity of acrylic and/or polycarbonate.** Click here for Acrylic-Polycarbonate Compatibility table for suitable uses.

CONSTRUCTION — Compact, low-profile, architectural design with die-cast aluminum housing. Finishes are texturized powder coat paint for dark bronze, white, black and non-texturized for natural aluminum. Test switch indicator light and remote enabled are located on the bottom of the housing and are easily accessible and visible from the floor.

OPTICS — LEDs with L70 of 55,000 hours. Delivers 635 lumens in Normal-On and Emergency operation. Optional field configurable for wide and forward throw distribution (U.S. Patent No. - US10236712 B2).

Outdoor wide throw distribution: 70' (3' path of egress) at a 7.5' mounting height with 1 FC Average.

4,000K correlated color temperature (CCT).

70 CRI.

ELECTRICAL — UVOLT (120 thru 347V, 50/60hz). Current-limiting charger maximizes battery life and minimizes energy consumption to provide low operating costs. Small battery chargers Certified in the CA Title 20 Appliance Efficiency Database

Short-circuit protection — current-limiting charger circuitry protects printed circuit board from shorts. Regulated charge voltage maintains a stable charge voltage over a wide range of line voltages.

Prevents over/undercharging that shortens battery life and reduces capacity. Filtered charger input minimizes charge voltage ripple and extends battery life.

Photocell option (PEL) for normally on product in order to discontinue illumination during periods when ambient light is present. Photocell option (PEL) for normally on products allow the user to force lamp illumination by user control (external switch). When power is not connected to switched line, illumination will respond to internal daylight sensor. For switched line applications, no other types of products shall be connected on the switched leg.

Remote units (OELR) are normally off. Emergency only functionality with DC power from an external battery.

BATTERY: Sealed, maintenance-free Lithium Iron Phosphate battery.

SELF-DIAGNOSTICS AND REMOTE TEST (SDRT OPTION): Automatic 24-hour recharge after a 90-minute discharge. Advanced electrical design provides constant light output throughout the entire discharge period for non-CW batteries. (For cold weather and cold temperature applications, the light may diminish though the discharge cycle). Brownout protection is automatically switched to emergency mode when supply voltage drops below approximately 80 percent nominal of 120, 220, 277 or 347. Other input voltages may vary. AC/LVD re-set allows battery connection before AC power is applied and prevents battery damage from deep discharge.

Self-Diagnostics: Continuously monitors AC functionality. Standard derangement monitoring will indicate disconnected battery, charger failure and displays green flashing indicator light while in emergency mode. Single multi-chromatic LED indicator to display two-state charging, test activation and three-state self-diagnostics.

Self-diagnostic testing: Five minutes every 30 days and 90 minutes annually. Diagnostic evaluation of lamps, AC to DC transfer, battery charging and condition of microprocessor. Automatic test is easily postponed for eight hours by activating manual test switch or use of remote tester (RTKIT accessory).

Manual testing: Test switch and remote tester (RTKIT accessory) provides manual activation of 60-second diagnostic testing for on-demand visual inspection. 90 minute manual testing can be enabled by pressing the test switch again while in test mode.

INSTALLATION — Wall mount: typically meets 7.5' to 14' mounting height from ground or floor. Power supplied by either mounting directly to a 4" square or 4" octagon j-box (wall mount) and accepts rigid or flex conduit.

LISTINGS — UL wet location listed standard at 32-122°F (0-50°C). Unit with CW battery (cold weather) listed for -22°F to 122°F (-30° to 50°C). Remote listed for -40°F to 122°F (-40° to 50°C). Meets or exceeds all applicable requirements for UL 924, NFPA 101 (current Life Safety code), NFPA 70 (NEC), NOM (Norma Oficial Mexicana), California Energy Commission Title 20 section 1605.3 (W)(4), FCC Title 47, Part 15, Subpart B and OSHA. List and labeled to comply with Canadian Standards C22.2 No. 141-10. Meets City of Chicago Code.

Government Procurement:
BAA - Buy America(n) Act: Product with the BAA option qualifies as a domestic end product under the Buy American Act as implemented in the FAR and DFARS. Product with the BAA option also qualifies as manufactured in the United States under DOT Buy America regulations.

BABA - Build America Buy America: Product with a BAA option also qualifies as produced in the United States under the definitions of the Build America, Buy America.

Please refer to www.acuitybrands.com/buy-american for additional information.

WARRANTY — 5-year limited warranty (Battery is prorated). This is the only warranty provided and no other statements in this specification sheet create any warranty of any kind. All other express and implied warranties are disclaimed. Complete warranty terms located at: www.acuitybrands.com/support/warranty/terms-and-conditions

Note: Actual performance may differ as a result of end-user environment and application. All values are design or typical values, measured under laboratory conditions at 25 °C. Specifications subject to change without notice.

† Small Battery Chargers Certified in the CA Title 20 Appliance Efficiency Database.

without photocell (white) — without photocell (natural aluminum) — with photocell (white) — with photocell (dark bronze)

MOUNTING

All dimensions are inches (centimeters).
Shipping weight: 3.5 lbs. (1.59 kgs.)

Length: 6 1/2 (16.51)
Depth: 3 27/100 (8.30)
Height: 10 (25.45)
Weight : 3.5 lbs (1.59kg)

LISTED

EMERGENCY — AFF

D-Series Size 1
LED Area Luminaire

Catalog Number	DSX1 LED P2 40K 70CRI LCCO MVOLT
Notes	
Type	SA

Hit the Tab key or mouse over the page to see all interactive elements.

d"series

Introduction

The modern styling of the D-Series features a highly refined aesthetic that blends seamlessly with its environment. The D-Series offers the benefits of the latest in LED technology into a high performance, high efficacy, long-life luminaire.

The photometric performance results in sites with excellent uniformity, greater pole spacing and lower power density. D-Series outstanding photometry aids in reducing the number of poles required in area lighting applications with typical energy savings of 65% and expected service life of over 100,000 hours.

Specifications

EPA:	0.69 ft² (0.06 m²)
Length:	32.71" (83.1 cm)
Width:	14.26" (36.2 cm)
Height H1:	7.88" (20.0 cm)
Height H2:	2.73" (6.9 cm)
Weight:	34 lbs (15.4 kg)

Ordering Information

EXAMPLE: DSX1 LED P7 40K 70CRI T3M MVOLT SPA NLTAIR2 PIRHN DDBXD

DSX1 LED

Series	LEDs	Color temperature	Color Rendering Index	Distribution	Voltage	Mounting
DSX1 LED	Forward optics: P1, P2, P3, P4, P5, P6, P7, P8, P9; Rotated optics: P10, P11, P12, P13	(this section 70CRI only) 30K 3000K; 40K 4000K; 50K 5000K; (this section 80CRI only, extended lead times apply) 27K 2700K; 30K 3000K; 35K 3500K; 40K 4000K; 50K 5000K	70CRI; 80CRI	AFR Automotive front row; T1S Type I short; T2M Type II medium; T3M Type III medium; T3LG Type III low glare; T4M Type IV medium; T4LG Type IV low glare; TFTM Forward throw medium; T5M Type V medium; T5LG Type V low glare; T5W Type V wide; BLC3 Type III backlight control; BLC4 Type IV backlight control; LCCO Left corner cutoff; RCCO Right corner cutoff	MVOLT (120V-277V); HVOLT (347V-480V); XVOLT (277V - 480V); 120; 208; 240; 277; 347; 480	Shipped included: SPA Square pole mounting (#8 drilling); RPA Round pole mounting (#8 drilling); SPA5 Square pole mounting #5 drilling; RPA5 Round pole mounting #5 drilling; SPA8N Square narrow pole mounting #8 drilling; WBA Wall bracket; MA Mast arm adapter (mounts on 2 3/8" OD horizontal tenon)

Control options		Other options	Finish (required)
Shipped installed: NLTAIR2 PIRHN nLight AIR gen 2 enabled with bi-level motion / ambient sensor, 8-40' mounting height, ambient sensor enabled at 2fc; PIR High/low, motion/ambient sensor, 8-40' mounting height, ambient sensor enabled at 2fc; PER NEMA twist-lock receptacle only (controls ordered separate); PER5 Five-pin receptacle only (controls ordered separate)	PER7 Seven-pin receptacle only (controls ordered separate); FAO Field adjustable output; BL30 Bi-level switched dimming, 30%; BL50 Bi-level switched dimming, 50%; DMG 0-10v dimming wires pulled outside fixture (for use with an external control, ordered separately); DS Dual switching	Shipped installed: SPD20KV 20KV surge protection; HS Houseside shield (black finish standard); L90 Left rotated optics; R90 Right rotated optics; CCE Coastal Construction; HA 50°C ambient operation; BAA Buy America(n) Act Compliant; SF Single fuse (120, 277, 347V); DF Double fuse (208, 240, 480V); Shipped separately: EGSR External Glare Shield (reversible, field install required, matches housing finish); BSDB Bird Spikes (field install required)	DDBXD Dark Bronze; DBLXD Black; DNAXD Natural Aluminum; DWHXD White; DDBTXD Textured dark bronze; DBLBXD Textured black; DNATXD Textured natural aluminum; DWHGXD Textured white

LITHONIA LIGHTING — COMMERCIAL OUTDOOR
One Lithonia Way • Conyers, Georgia 30012 • Phone: 1-800-705-SERV (7378) • www.lithonia.com
© 2011-2023 Acuity Brands Lighting, Inc. All rights reserved.
DSX1-LED Rev. 09/05/23 Page 1 of 10

D-Series Size 1
LED Area Luminaire

Catalog Number	DSX1 LED P3 40K 70CRI BLC3 MVOLT
Notes	
Type	SB

The modern styling of the D-Series features a highly refined aesthetic that blends seamlessly with its environment. The D-Series offers the benefits of the latest in LED technology into a high performance, high efficacy, long-life luminaire.

D-Series Size 1
LED Area Luminaire

Catalog Number	DSX1 LED P2 40K 70CRI TFTM MVOLT HS
Notes	
Type	SC

D-Series Size 1
LED Area Luminaire

Catalog Number	DSX1 LED P5 40K 70CRI T5M MVOLT
Notes	
Type	CD

D-Series Size 1
LED Wall Luminaire

Catalog Number	DSXW1 P4 30K 80CRI T4M MVOLT
Notes	
Type	WA

Hit the Tab key or mouse over the page to see all interactive elements.

Specifications

Luminaire

Width:	13-3/4" (34.9 cm)	Weight:	12 lbs (5.4 kg)
Depth:	10" (25.4 cm)		
Height:	6-3/8" (16.2 cm)		

Back Box (BBW, E20WC)

Width:	13-3/4" (34.9 cm)	BBW Weight:	5 lbs (2.3 kg)
Depth:	4" (10.2 cm)	E20WC Weight:	10 lbs (4.5 kg)
Height:	6-3/8" (16.2 cm)		

For 3/4" NPT side-entry conduit (BBW only)

Introduction

The D-Series Wall luminaire is a stylish, fully integrated LED solution for building-mount applications. It features a sleek, modern design and is carefully engineered to provide long-lasting, energy-efficient lighting with a variety of optical and control options for customized performance.

With an expected service life of over 20 years of nighttime use and significant energy savings, the D-Series Wall is a reliable, low-maintenance lighting solution that produces sites that are exceptionally illuminated.

Ordering Information

EXAMPLE: DSXW1 LED P2 40K 70CRI T3M MVOLT SRM DDBTXD

DSXW1 LED

Series	Lumen Package	CCT	CRI	Distribution	Voltage	Mounting	Control Options
DSXW1 LED	P1 2000 Lumens; P2 2200 Lumens; P3 3200 Lumens; P4 4300 Lumens; P5 5200 Lumens; P6 7200 Lumens; P7 10000 Lumens	27K 2700K; 30K 3000K; 35K 3500K; 40K 4000K; 50K 5000K; 57K 5700K; AMBPC Amber PC; AMBLW Amber LW	70CRI 70CRI; 80CRI 80CRI; AMCRI Amber CRI	T2S Type 2 Short; T2M Type 2 Medium; T3LG Type 3 Low Glare; T3M Type 3 Medium; T4M Type 4 Medium; TFTM Forward Throw Medium; BLC3 Back Light Control Type 3; BLC4 Back Light Control Type 4	MVOLT; 120; 208; 240; 277; 347; 480; HVOLT	Shipped included: SRM Surface mounting bracket; BBW Surface-mounted back box (for conduit entry)	Shipped installed: PE Photoelectric cell, button type; DMG 0-10v dimming wires pulled outside fixture (for use with an external control, ordered separately); PIR 180° motion/ambient light sensor, <15' mtg ht; PIRH 180° motion/ambient light sensor, 15-30' mtg ht; PIR1FC3V Motion/ambient sensor, 8-15' mounting height, ambient sensor enabled at 1fc; PIRH1FC3V Motion/ambient sensor, 15-30' mounting height, ambient sensor enabled at 1fc; E20WC 20 Watt Emergency battery backup (includes external component enclosure), CA Title 20 Compliant; E10WH 10 Watt Emergency battery backup (includes external component enclosure), CA Title 20 compliant

Other Options		Finish (required)
Shipped installed: SF Single fuse (120, 277 or 347V); DF Double fuse (208, 240 or 480V); HS House-side shield; SPD Separate surge protection	Shipped separately: BSW Bird-deterrent spikes; VG Vandal guard; DDL Diffused drop lens	DDBXD Dark bronze; DBLXD Black; DNAXD Natural aluminum; DWHXD White; DSSXD Sandstone; DDBTXD Textured dark bronze; DBLBXD Textured black; DNATXD Textured natural aluminum; DWHGXD Textured white; DSSTXD Textured sandstone

Accessories — Ordered and shipped separately.
DSXWHS U — House-side shield (one per light engine)
DSXWBSW U — Bird-deterrent spikes
DSXW1VG U — Vandal guard accessory

NOTES
1 Only available with P1 and P6 Packages.
2 Not available with 57K.
3 Only Available with AMCRI.
4 Not available with HS Option.
5 Single fuse (SF) requires 120, 277 or 347 voltage option. Double fuse (DF) requires 208, 240 or 480 voltage option.
6 Not available with P1 package. Not available with motion/ambient light sensors (PIR or PIRH). Not Available with DMG.
7 Back box ships installed on fixture. Cannot be field installed. Cannot be ordered as an accessory. Not Available with E20WC or E10WH.
8 Photocontrol (PE) requires 120, 208, 240, 277 or 347 voltage option. Not available with motion/ambient light sensors (PIR or PIRH).
9 Reference Motion Sensor table on page 3. Not available with DMG.
10 Not compatible with conduit entry applications. Not available with BBW mounting option. Not available with SF and DF fusing. Not available with 347, 480, HVOLT voltage options. Emergency components located in back box housing. Not available with SPD.
11 Not available with E20WC and E10WH.
12 Also available as a separate accessory; see Accessories information.

LITHONIA LIGHTING — COMMERCIAL OUTDOOR
One Lithonia Way • Conyers, Georgia 30012 • Phone: 1-800-705-SERV (7378) • www.lithonia.com
© 2013-2024 Acuity Brands Lighting, Inc. All rights reserved.
DSXW1-LED Rev. 12/12/24

WDGE1 LED
Architectural Wall Sconce

Catalog Number	WDGE1 LED P0 30K 80CRI VW MVOLT
Notes	
Type	WB

Specifications

Depth (D1):	5.5"
Depth (D2):	1.5"
Height:	8"
Width:	9"
Weight: (without options)	9 lbs

Introduction

The WDGE LED family is designed to meet specifier's every wall-mounted lighting need in a widely accepted shape that blends with any architecture. The clean rectilinear design comes in four sizes with lumen packages ranging from 1,200 to 25,000 lumens, providing true site-wide solution.

WDGE1 delivers up to 2,000 lumens with a soft, non-pixelated light source, creating a visually comfortable environment. The compact size of WDGE1, with its integrated emergency battery backup option, makes it an ideal over-the-door wall-mounted lighting solution.

WDGE LED Family Overview

Luminaire	Optics	Standard EM, 0°C	Cold EM, -20°C	Sensor	P0	P1	P2	P3	P4	P5	P6
					Approximate Lumens (4000K, 80CRI)						
WDGE1 LED	Visual Comfort	4W		--	750	1,200	2,000	--	--	--	--
WDGE2 LED	Visual Comfort	10W	18W	Standalone / nLight	--	1,200	2,000	3,000	4,500	6,000	--
WDGE2 LED	Precision Refractive	10W	18W	Standalone / nLight	700	1,200	2,000	3,200	4,200	--	--
WDGE3 LED	Precision Refractive	15W	18W	Standalone / nLight	6,000	7,500	8,500	10,000	12,000	--	--
WDGE4 LED	Precision Refractive			Standalone / nLight	--	12,000	16,000	18,000	20,000	22,000	25,000

Ordering Information

EXAMPLE: WDGE1 LED P2 40K 80CRI VF MVOLT SRM PE DDBXD

Series	Package	Color Temperature	CRI	Distribution	Voltage	Mounting
WDGE1 LED	P0; P1; P2	27K 2700K; 30K 3000K; 35K 3500K; 40K 4000K; 50K 5000K	80CRI; 90CRI	VF Visual comfort forward throw; VW Visual comfort wide	MVOLT; 347	Shipped included: SRM Surface mounting bracket; ICW Indirect Canopy/Ceiling Washer bracket (dry/damp locations only); Shipped separately: AWS 3/8inch Architectural wall spacer; PBBW Surface-mounted back box (top, left, right conduit entry) Use when there is no junction box available.

Options	Finish
E4WH Emergency battery backup, Certified in CA Title 20 MAEDBS (4W, 0°C min); PE Photocell, Button Type; DS Dual switching (comes with 2 drivers and 2 light engines; see page 3 for details); DMG 0-10V dimming wires pulled outside fixture (for use with an external control, ordered separately); BCE Bottom conduit entry for back box (PBBW). Total of 4 entry points.; DSLE Dual Switching (1 Driver, 2 Light Engines); CCE Coastal Construction	DDBXD Dark bronze; DBLXD Black; DNAXD Natural aluminum; DWHXD White; DSSXD Sandstone; DDBTXD Textured dark bronze; DBLBXD Textured black; DNATXD Textured natural aluminum; DWHGXD Textured white; DSSTXD Textured sandstone

LITHONIA LIGHTING — COMMERCIAL OUTDOOR
One Lithonia Way • Conyers, Georgia 30012 • Phone: 1-800-705-SERV (7378) • www.lithonia.com
© 2019-2024 Acuity Brands Lighting, Inc. All rights reserved.
WDGE1 LED Rev. 04/25/24

D-Series Size 1
LED Wall Luminaire

Catalog Number	DSXW1 P1 30K 70CRI T2M MVOLT
Notes	
Type	WC

D-Series Size 1
LED Wall Luminaire

Catalog Number	DSXW1 P3 40K 70CRI T4M MVOLT
Notes	PIRIFC3V
Type	WD

FIXTURE NOTE:

FIXTURE SHOWN ON THIS SHEET IS FOR REFERENCE ONLY. SEE ACTUAL FIXTURE SCHEDULE ELSE WHERE IN THIS DOCUMENTS FOR ACTUAL CATALOG NUMBER AND DESCRIPTION.

N60

CHEHAYEB & ASSOCIATES, INC.
CONSULTING PROFESSIONAL ENGINEERS
3702 AZEELE ST. TAMPA, FL 33609 — (813) 876-1415 www.chehayeb.com
LIC. #49521 SOUHEIL S. CHEHAYEB CERT. #7340
25-62

FWH Architects
3336 Grand Blvd. Suite 201
Holiday, Florida 34690
Ph. 727. 815. 3336
FABER@FWHARCHITECTS.COM

brightwork real estate
3708 WEST SWANN AVE, SUITE 200
TAMPA, FL 33609
PHONE: 813.874.1700

TO THE BEST OF THE KNOWLEDGE OF THE ARCHITECTS AND ENGINEERS, PLANS AND SPECIFICATIONS COMPLY WITH THE APPLICABLE MINIMUM BUILDING CODES AND THE APPLICABLE MINIMUM FIRE SAFETY STANDARDS

SOUHEIL CHEHAYEB, P.E.
FL License No. 49521

no.	date	revision descriptions
1	11.21.2025	REVISED PER SITE PERMIT COMMENTS
2	12.02.2025	REVISED PER COORDINATION W/ TENANT INTERIORS

CHIPOTLE MEXICAN GRILL
BUILDING SHELL

NOLTE RD. AND KYRST RUN
ST. CLOUD, FLORIDA

08.29.2025
date

25008
comm. no.

FIXTURE INFORMATION

E102

Name: Garrison DSI Printed Date: 11/26/2025 8:42 AM

ELECTRICAL MATERIAL SCHEDULE

CATEGORY	APPLICATION	ALLOWABLE MATERIAL
CONDUCTORS	#10 AWG AND SMALLER	SOLID CU, TYPE THHN/THWN OR XHHW
	#8 AWG AND LARGER	STRANDED CU, TYPE THHN/THWN OR XHHW
CONDUITS	INDOOR, EXPOSED	ELECTRICAL METALLIC TUBING U.N.O.
	INDOOR, WITHIN 1-1/2" OF ROOF DECK	INTERMEDIATE METAL CONDUIT
	INDOOR, CONCEALED ABOVE GRADE	ELECTRICAL METALLIC TUBING, FLEXIBLE METAL CONDUIT, OR METAL CLAD CABLE
	CONNECTION TO VIBRATING EQUIPMENT (EXPOSED WET OR DAMP LOCATIONS)	LIQUIDTIGHT FLEXIBLE METAL CONDUIT
	CONNECTION TO VIBRATING EQUIPMENT (EXPOSED INDOOR DRY LOCATIONS)	FLEXIBLE METAL CONDUIT
	OUTDOOR, ABOVE GRADE, EXPOSED OR CONCEALED	INTERMEDIATE METAL CONDUIT
	LOW VOLTAGE, INDOOR, ABOVE GRADE	ELECTRICAL METALLIC TUBING
	LOW OR LINE VOLTAGE, BELOW GRADE	RIGID NONMETALLIC CONDUIT (SCHEDULE 40 PVC)

WIRE SIZING NOTE:

WHERE WIRE SIZES ARE SHOWN ON DRAWING OR PANEL SCHEDULE, THE SAME WIRE SIZE, AS A MINIMUM, SHALL BE CARRIED THROUGHOUT THE CIRCUIT. TYPICAL FOR ALL DRAWINGS.

N/A

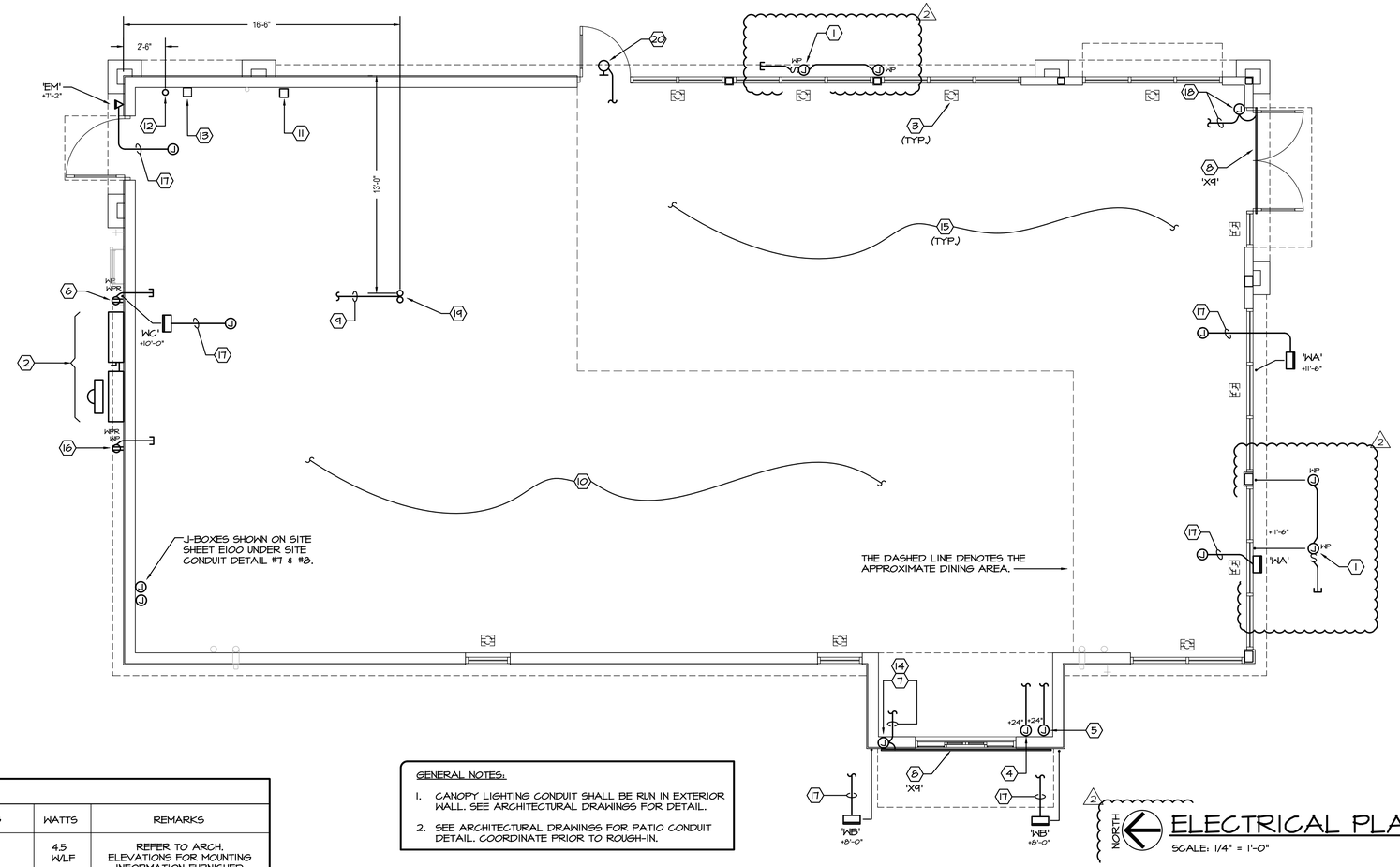

ELECTRICAL PLAN

SCALE: 1/4" = 1'-0"

NORTH

GENERAL NOTES:

1. CANOPY LIGHTING CONDUIT SHALL BE RUN IN EXTERIOR WALL. SEE ARCHITECTURAL DRAWINGS FOR DETAIL.
2. SEE ARCHITECTURAL DRAWINGS FOR PATIO CONDUIT DETAIL. COORDINATE PRIOR TO ROUGH-IN.

FIXTURE SCHEDULE

LIGHTING

TYPE	MANUFACT.	CATALOG NO.	VOLT	LAMPS	MOUNTING	WATTS	REMARKS
X9	PARADIGM LED	PL-PS-M200/M100/M40-DIM-24 (LED DRIVER) FLEXSR-45-30-67C-24-XX (LED LINEAR RIBBON, CUT DOOR RATED) AMC-2410-S-XX-EC/ECL-0 (LED LINEAR STRIP CHANNEL WITH OPAL LENS) (COORDINATE ALL CAT. NO. WITH MANUFACTURER, PARADIGM LED AT 303-344-0386 AND PROVIDE ALL ACCESSORIES AS REQUIRED FOR A COMPLETE PROJECT) XX= FIELD VERIFY EXACT LENGTH PRIOR TO ORDERING.	120	INCLUDED IN LED RIBBON	SURFACE	4.5 W/LF	REFER TO ARCH. ELEVATIONS FOR MOUNTING INFORMATION FURNISHED W/REMOTE-MTD NEMA 3R DIMMABLE LED DRIVER SEE PLANS FOR LENGTHS
WA	LITHONIA	DSXW1-P4-30K-80CRI-T4M-MVOLT-(CBA)	120	LED	EXTERIOR WALL SURFACE	29	SEE ARCHITECTURAL EXTERIOR ELEVATION FOR LOCATION
WB	LITHONIA	WDGE1-LED-P0-30K-80CRI-VW-MVOLT-(CBA)	120	LED	EXTERIOR WALL SURFACE	7	SEE ARCHITECTURAL EXTERIOR ELEVATION FOR LOCATION
WC	LITHONIA	DSXW1-P1-30K-70CRI-T2M-MVOLT-(CBA)	120	LED	EXTERIOR WALL SURFACE	13	SEE ARCHITECTURAL EXTERIOR ELEVATION FOR LOCATION
EM	LITHONIA	AFF-OEL-(CBA)-UVOLT-LTP-SDRT-FCT	120	LED	EXTERIOR WALL SURFACE	2.5	SEE ARCHITECTURAL EXTERIOR ELEVATION FOR LOCATION

CBA = COLOR SELECTED BY ARCHITECT.

NOTES:

1. WHERE USED. ALL FLUORESCENT LIGHTING FIXTURES SHALL HAVE ENERGY SAVING T5, T5HO, OR T8 LAMPS WITH ELECTRONIC BALLASTS.
2. PROVIDE NECESSARY MOUNTING HARDWARE AND ACCESSORIES FIXTURES. ACCESSORIES SHALL INCLUDE ALL HARDWARE TO MOUNT FIXTURES AS SHOWN ON SCHEDULES AND/OR DESCRIBED IN THE NOTES.
3. ALL FIXTURE SUBSTITUTIONS MUST BE SUBMITTED FOR APPROVAL (EQUALS ONLY).
4. ALL EMERGENCY, EXIT, AND NIGHT LIGHT FIXTURES SHALL BE CONNECTED AHEAD OF LOCAL SWITCHES, RELAYS, OR CONTACTORS UNLESS OTHERWISE NOTED.
5. ALL PRE SUBMITTALS SHALL BE ACCOMPANIED WITH PHOTOMETRIC DATA.
6. ALL FIXTURES SHALL BE SUPPORTED FROM STRUCTURE AND NOT FROM SUSPENDED CEILING SYSTEM.
7. EQUAL ACCEPTED MANUFACTURERS ARE: DAY-BRITE, LITHONIA, COLUMBIA. EVEN THOUGH THESE MANUFACTURERS ARE ACCEPTED, A TEN DAY PRIOR APPROVAL MUST BE SUBMITTED FOR EVALUATION.
8. CATALOG NUMBER ON FIXTURE SCHEDULE MAY NOT REFERENCE EVERY HARDWARE COMPONENT REQUIRED TO MOUNT FIXTURE AS INTENDED. VERIFY WITH MANUFACTURER FOR PROPER MOUNTING HARDWARE AND ANY ADDITIONAL COMPONENTS REQUIRED TO MOUNT FIXTURE AS INTENDED OR SHOWN.
9. WHERE USED. ALL LINEAR TYPE FLUORESCENT LUMINAIRES SHALL COMPLY WITH N.E.C. 410.130(G) FOR BALLAST DISCONNECT.
10. WHERE USED. LAMPS SHALL BE ENERGY SAVING WITH COLOR TEMPERATURE AS SHOWN ON SCHEDULE WITH MINIMUM CRI OF 82.
11. WHERE USED. LAMPS SHALL BE BY SYLVANIA, G.E., OR PHILIPS, EXCEPT WHEN SUCH LAMPS ARE NOT AVAILABLE FROM THESE MANUFACTURERS, OR SPECIFIED OTHERWISE IN SCHEDULE.
12. SHOP DRAWINGS SHALL INCLUDE:
    A. COMPLETE FIXTURE CUT SHEETS INCLUDING PHOTOMETRICS.
    B. BALLAST CUT SHEETS.
    C. LAMP CUT SHEETS.
13. UNLESS OTHERWISE NOTED, (NL) DENOTES A 'NIGHT LIGHT' FIXTURE. NIGHT LIGHT FIXTURES SHALL BE UNSWITCHED, EMERGENCY BALLAST SHALL BE TIED TO A CONSTANT HOT AHEAD OF LOCAL SWITCHING AND/OR CONTROL PANEL.
14. BATTERY BALLAST IN THE FLUORESCENT FIXTURES SHALL BE UL 924 LISTED AND COMPLY WITH NFPA 101 LIFE SAFETY CODE SECTION 7.9. THE SYSTEM SHALL BE PERIODICALLY TESTED PER NFPA 101 SECTION 7.9.3.1.1.
15. COORDINATE TRACK LENGTH WITH PLAN AND CUT ACCORDINGLY, IF NOT A STANDARD TRACK LENGTH.
16. PROVIDE ALL REQUIRED 0-10V WIRING TO 0-10V DIMMABLE FIXTURES AND CONTROLS AS REQUIRED. THIS 0-10V LOW VOLTAGE WIRING IS NOT SHOWN ON PLANS FOR DRAWING CLARITY. 0-10V WIRING SHALL BE TYPE COMPATIBLE WITH THE FIXTURE DIMMING DRIVER TYPE (CLASS 1 OR 2). CONTRACTOR SHALL COORDINATE WITH MANUFACTURER FOR CABLE TYPE, SIZE, AND INSTALLATION REQUIREMENT AND COMPLY ACCORDINGLY. ALL WIRING SHALL BE IN COMPLIANCE WITH N.E.C. ARTICLE 725.
17. PROVIDE WIRING AS REQUIRED FOR STEP DIMMING FIXTURES. CONTROL WIRING NOT SHOWN ON THESE DOCUMENTS FOR DRAWING CLARITY.

NOTES

KEY

1. PROVIDE WEATHERPROOF JUNCTION BOX FOR SIGNAGE WITH 3/4" CONDUIT STUBBED INTO SPACE AT ACCESSIBLE LOCATION. WIRING, DISCONNECT SWITCHES, AND FINAL CONNECTION BY TENANT IMPROVEMENT CONTRACTOR. COORDINATE EXACT LOCATION WITH OWNER AND TENANT. J-BOX SHALL BE LOCATED WITHIN 6'-0" OF THE SIGN.
2. ELECTRICAL SERVICE LOCATION. REFER TO POWER RISER DIAGRAM ON SHEET E300 FOR ADDITIONAL DETAILS.
3. SHOW WINDOW RECEPTACLES, IN ACCORDANCE WITH N.E.C. 210.62, TO BE FURNISHED AND INSTALLED BY OTHERS, AT TIME OF TENANT IMPROVEMENTS.
4. PROVIDE J-BOX WITH 1-GANG PLASTER RING FOR AN AIR CURTAIN. CONNECT AIR CURTAIN TO OPERABLE WINDOW PER MANUFACTURER INSTALLATION INSTRUCTIONS. CONDUIT SHALL BE CONCEALED IN WALL AND STORE FRONT SYSTEM. PROVIDE 3/4" CONDUIT WITH PULL WIRE TO ABOVE CEILING SPACE, IN AN ACCESSIBLE LOCATION.
5. PROVIDE 4"x4" JUNCTION BOX FOR PICK-UP WINDOW POWER. PROVIDE FINAL CONNECTION TO PICK-UP WINDOW CONCEALED IN WALL PER MANUFACTURER INSTALLATION INSTRUCTIONS. PROVIDE 3/4" CONDUIT WITH PULL WIRE TO ABOVE CEILING SPACE, IN AN ACCESSIBLE LOCATION.
6. DUPLEX RECEPTACLE WITH 1/2" CONDUIT WITH PULL WIRE STUBBED AT THE CEILING STRUCTURE FOR MAINTENANCE.
7. J-BOX FOR POWERING EXTERIOR LIGHTING SHOWN. PROVIDE 2-#10, 1-#10 E.G. IN 3/4" CONDUIT TO ABOVE PROPOSED TENANT PANEL LOCATION.
8. EXTERIOR LIGHT FIXTURE. SEE ARCHITECTURAL PLANS ~~SHEETS A404 AND A405~~ FOR EXACT LOCATIONS AND MOUNTING HEIGHTS.
9. TELEPHONE/DATA CONDUIT WITH PULL WIRE. COORDINATE EXACT LOCATION WITH TENANT. CONDUIT SHALL BE STUBBED UP 12", CAPPED AND LABELED IN SPACE. SEE SITE PLAN SHEET E100 FOR CONTINUATION.
10. ALL LANDLORD'S BASE BUILDING WIRING RUNNING THROUGH TENANT'S CEILING SHALL BE ENCASED IN EMT OR IMC CONDUIT, RUN TIGHT TO THE DECK, HOWEVER IT SHALL COMPLY WITH N.E.C. ARTICLE 300.4(E) AND BE EITHER PARALLEL OR PERPENDICULAR TO THE MAIN ENTRY STOREFRONT. THERE SHALL BE NO DIAGONAL RUNS OR AND ALL CONDUITS SHALL BE IN STRAIGHT LINES.
11. OPTIONAL BOOSTER PUMP, TO BE POWERED UNDER INTERIOR DESIGN PACKAGE, IF REQUIRED.
12. STUB-UP CONDUITS WITH FEEDER WIRE. SEE RISER DIAGRAM SHEET E300. VERIFY EXACT LOCATION PRIOR TO ROUGH-IN. SEE ARCHITECTURAL DRAWINGS FOR DIMENSIONAL LOCATION.
13. 8"x8"x4" J-BOX AT 11'-0" A.F.F. FOR CONNECTION OF THE CONDUITS AND CONDUCTORS FROM SITE LIGHTING.
14. INSTALL LED DRIVERS FURNISHED WITH THE 'X9' STRIP LIGHTS ON WALL 6" ABOVE CEILING IN AN ACCESSIBLE LOCATION. PROVIDE LOW VOLTAGE WIRING FROM THE LED DRIVER TO THE 'X9' LIGHT FIXTURES AS SHOWN.
15. NO CONDUITS SHALL BE RUNNING WITHIN THIS AREA. CEILING WILL BE EXPOSED TO STRUCTURE IN THIS AREA.
16. DUPLEX RECEPTACLE WITH 1/2" CONDUIT WITH PULL WIRE STUBBED AT THE CEILING STRUCTURE FOR IRRIGATION CONTROLLER.
17. PROVIDE 3-#12 AND 1-#12 E.G. IN 1/2" CONDUIT TO A J-BOX, WITH IN BUILDING BAR JOIST, FOR FUTURE EXTENSION TO TENANT PANEL FOR POWER AND CONTROLS.
18. J-BOX FOR POWERING EXTERIOR LIGHTING SHOWN. PROVIDE 2-#10, 1-#10 E.G. IN 3/4" CONDUIT TO ABOVE PROPOSED TENANT PANEL LOCATION. MOUNT J-BOX TIGHT TO THE DECK.
19. STUB-UP CONDUIT FOR TELEPHONE / DATA SERVICE CONDUITS. FIELD VERIFY LOCATION PRIOR TO ROUGH IN. SEE ARCHITECTURAL DRAWINGS FOR DIMENSIONAL LOCATION. ~~HOLD THE CONDUITS TIGHT TO THE WALL.~~
20. PROVIDE A WEATHERPROOF REMOTE EMERGENCY HEAD. EXITRONIX-MLED-J-B-WP FIXTURE. FIELD COORDINATE EXACT MOUNTING AND LOCATION PRIOR TO ROUGH IN. PROVIDE 1/2" CONDUIT STUBBED INSIDE THE BUILDING FOR FUTURE TIE IN TO THE EXIT LIGHT ABOVE THE DOOR. EXIT LIGHT TO BE PROVIDED AS PART OF THE TI DOCUMENTS.

CONDUIT STUB-UP NOTE:

COORDINATE ALL STUB-UP LOCATIONS AND REQUIREMENTS WITH OWNER PRIOR TO ROUGH-IN. PROVIDE PULL WIRE FOR ALL EMPTY CONDUITS. CAP AND LABEL EACH CONDUIT STUB-UP.

WIRING NOTE:

ELECTRICAL CONTRACTOR TO PROVIDE ALL WIRING IN WALL CAVITY. NO EXPOSED WIRING OR CONDUIT PERMITTED.

DURING PREPARATION OF THESE SHELL CONSTRUCTION DOCUMENTS, TO THE FULLEST EXTENT POSSIBLE, UTILITY SIZES AND STUB-INS HAVE BEEN PROVIDED TO SATISFY TENANT REQUIREMENTS AND HAVE BEEN COORDINATED WITH CIVIL PLANS.

REFER TO ELECTRICAL AND PLUMBING DRAWINGS FOR ADDITIONAL INFORMATION REGARDING UTILITY STUB-IN SIZES AND LOCATIONS INCLUDING, BUT NOT LIMITED TO, ELECTRICAL POWER, SANITARY WASTE, DOMESTIC WATER, GREASE WASTE, TELEPHONE AND CATV.

TO THE FULLEST EXTENT POSSIBLE, THE SHELL GENERAL CONTRACTOR SHALL OBTAIN TENANT FINISH-OUT PLANS TO VERIFY IF SPECIFIC LOCATIONS FOR ANY UTILITY STUB-INS ARE REQUIRED AND SHALL PLACE THEM ACCORDINGLY.

WORK SHOWN UNDER THIS PERMIT IS FOR SHELL BUILDING ONLY, ALL ADDITIONAL INTERIOR WORK TO BE PERFORMED UNDER SEPARATE PERMIT, PRIOR TO TENANT OCCUPYING SPACE.

CHEHAYEB & ASSOCIATES, INC.
CONSULTING PROFESSIONAL ENGINEERS
3702 AZEELE ST.
TAMPA, FL 33609
(813) 876-1415
www.chehayeb.com
LIC. #49521 SOUHEIL S. CHEHAYEB CERT. #7340
25-62

FWH Architects
3336 Grand Blvd. Suite 201
Holiday, Florida 34690
Ph. 727. 815. 3336
FABER@FWHARCHITECTS.COM

brightwork real estate
3708 WEST SWANN AVE.
SUITE 200
TAMPA, FL 33609
PHONE: 813.874.1700

TO THE BEST OF THE KNOWLEDGE OF THE ARCHITECTS AND ENGINEERS, PLANS AND SPECIFICATIONS COMPLY WITH THE APPLICABLE MINIMUM BUILDING CODES AND THE APPLICABLE MINIMUM FIRE SAFETY STANDARDS

SOUHEIL CHEHAYEB, P.E.
FL License No. 49521

no.	date	revision descriptions
1	12.02.2025	REVISED PER COORDINATION W/ TENANT INTERIORS

CHIPOTLE MEXICAN GRILL
BUILDING SHELL

NOLTE RD. AND KYRST RUN
ST. CLOUD, FLORIDA

08.29.2025
date

25008
comm. no.

ELECTRICAL PLAN

E200

Name: Garrison DSI Printed Date: 11/25/2025 1:11 PM

GROUNDING DETAIL

SERVICE EQUIPMENT

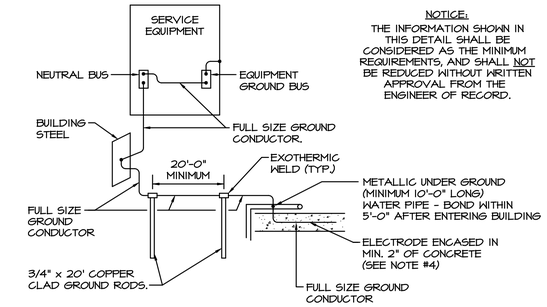

NOTICE:
THE INFORMATION SHOWN IN THIS DETAIL SHALL BE CONSIDERED AS THE MINIMUM REQUIREMENTS, AND SHALL NOT BE REDUCED WITHOUT WRITTEN APPROVAL FROM THE ENGINEER OF RECORD.

NOTES:

1. FULL SIZE GROUND MEANS THAT GROUND CONDUCTOR SIZE SHALL BE AS SHOWN ON SERVICE EQUIPMENT ON THE POWER RISER DIAGRAM.
2. AFTER GROUNDING SYSTEM IS INSTALLED, GROUND RESISTANCE SHALL BE MEASURED, TO ASSURE THAT GROUND VALUE OF 10 OHM MAXIMUM RESISTANCE IS ACHIEVED. IF NOT, ADDITIONAL GROUNDING SHALL BE PROVIDED TO MEET THE SPECIFIED VALUE.
3. ALL CONNECTIONS TO GROUND RODS SHALL BE EXOTHERMIC WELD CONNECTIONS.
4. GROUND CONDUCTOR SHALL BE LOCATED WITHIN OR NEAR BOTTOM OF CONCRETE FOUNDATION OR FOOTING THAT IS IN DIRECT CONTACT WITH THE EARTH, AND SHALL CONSIST OF AT LEAST 20 FEET OF ONE OR MORE STEEL REINFORCING BARS OR RODS OF NOT LESS THAN 1/2 INCH DIAMETER, OR OF AT LEAST 20 FEET OF BARE COPPER CONDUCTOR.

P14A

NOTICE

CONTRACTOR SHALL BE RESPONSIBLE FOR PROVIDING ARC FLASH LABELS AS REQUIRED BY NFPA 70 (NEC) 110.16, AND PERSONAL PROTECTIVE EQUIPMENT (PPE) RATING PLACARDS PER NFPA 70E FOR ALL NEW PANELBOARDS AND SWITCHGEAR.

CONTRACTOR SHALL ALSO BE RESPONSIBLE FOR FIELD MARKING PANELBOARDS AND SWITCHGEAR WITH THE AVAILABLE FAULT CURRENT AND THE DATE THE FAULT CURRENT CALCULATIONS WERE PERFORMED PER NFPA 70 (NEC) 110.24.

DISCONNECTS PROVIDED AS PART OF THIS PHASE OF THE PROJECT ARE FUSE-ABLE DISCONNECTS WITH CLASS 'R' FUSES AND CLASS 'R' REJECTION CLIPS OR CLASS 'J' FUSES. THE DISCONNECTS WITH THESE SPECIFIED FUSES ARE RATED AT 200,000 A.I.C. MINIMUM PER MANUFACTURER DATA.

SERVICE ENTRANCE EQUIPMENT BARRIERS REQUIREMENTS

BARRIERS SHALL BE PROVIDED IN SERVICE EQUIPMENT SUCH THAT NO UNINSULATED, UNGROUNDED SERVICE BUSBAR, SERVICE TERMINALS OR SERVICE CONDUCTORS IS EXPOSED TO UNINTENTIONAL CONTACT BY PERSON OR MAINTENANCE EQUIPMENT PERSONAL, WHILE SERVICING LOAD TERMINALS.

THIS SHALL INCLUDE BUT NOT LIMITED TO DISCONNECTS, MAIN BREAKERS, MAIN BREAKER PANELS, AND AUTOMATIC TRANSFER SWITCHES.

SERVICE ENTRANCE EQUIPMENT SHALL BE PROVIDED, WITH BARRIERS, IF SPECIFIED OR NOT IN THE DRAWING.

THESE BARRIERS SHALL BE IN FULL COMPLIANCE WITH N.E.C. SECTION 215.15, 230.71, 230.62(C) AND UL 67.

N9C

KEY NOTES

1. (3) SETS OF 3-1/2" CONDUITS WITH 4 - #300 CU. IN EACH.
1A. ~~DEDUCT ALTERNATE: CONTRACTOR SHALL PROVIDE A DEDUCT ALTERNATE TO USE ALUMINUM IN LIEU OF COPPER, AS FOLLOWS:~~ ~~THREE SETS OF 3-1/2" CONDUITS WITH 4 #400 MCM AL. (XHHW) IN EACH. SEE NOTES THIS SHEET FOR ALUMINUM SPECIFICATIONS.~~ 2
2. #2/0 CU. GROUND. SEE GROUNDING DETAIL ON THIS SHEET.
3. C.T.'S METER. COORDINATE RESPONSIBILITY WITH UTILITY COMPANY AND PROVIDE ACCORDINGLY.
4. (3) SETS OF 3-1/2" CONDUITS WITH 4 - #300 MCM CU. AND 1 #1/0 E.G. IN EACH. STUB CONDUIT 18" A.F.F. AND PROVIDE 18'-0" OF SLACK CONDUCTORS COILED AND TAPED FOR CONNECTION TO TENANT FURNISHED PANELBOARD. COORDINATE EXACT LOCATION WITH TENANT PRIOR TO ROUGH-IN.
5. 800 AMP, 3-POLE, S/N, NEMA 3R, HEAVY DUTY, 240V., SERVICE ENTRANCE RATED, LOCKABLE DISCONNECT WITH 800 AMP, CLASS 'L' FUSES.
6. PAD MOUNTED 120/208V., 3-PHASE TRANSFORMER, BY UTILITY.
7. (3) SETS OF 3-1/2" CONDUITS WITH 4 #300 MCM CU. AND 1 #2/0 LINE SIDE BONDING JUMPER IN EACH.
8. C.T.'S CABINET 36"x36", BY ELECTRICAL CONTRACTOR PER UTILITY COMPANY REQUIREMENTS.
9. 1-1/2" CONDUIT BETWEEN C.T. CABINET AND C.T. METER PER UTILITY COMPANY REQUIREMENT FOR THEIR USE.
10. PRIMARY CONDUITS FOR UTILITY USE, TO BE FURNISHED AND INSTALLED BY CONTRACTOR. COORDINATE TYPE, SIZE, QUANTITY, DESTINATION AND INSTALLATION SPECIFICATION REQUIREMENTS WITH THE UTILITY COMPANY AND PROVIDE ACCORDINGLY.
11. UTILITY TRANSFORMER CONCRETE PAD. PAD SHALL BE FURNISHED AND INSTALLED BY THE CONTRACTOR PER UTILITY COMPANY SPECIFICATIONS.

N4A

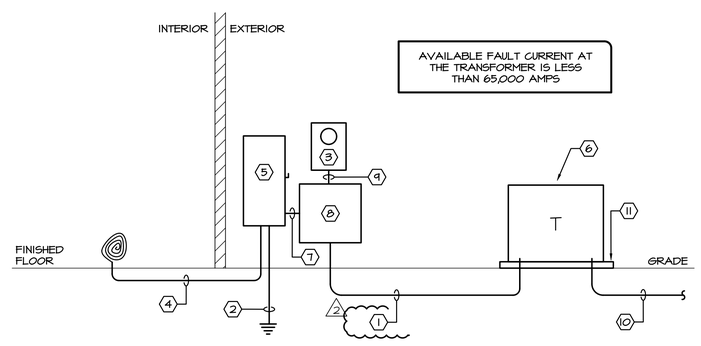

POWER RISER DIAGRAM

NO SCALE

CHEHAYEB & ASSOCIATES, INC.
CONSULTING PROFESSIONAL ENGINEERS
3702 AZEELE ST. TAMPA, FL 33609
(813) 876-1415 www.chehayeb.com
LIC. #49521 SOUHEIL S. CHEHAYEB CERT. #7340
25-62

FWH Architects
3336 Grand Blvd. Suite 201
Holiday, Florida 34690
Ph. 727. 815. 3336
FABER@FWHARCHITECTS.COM

brightwork real estate
3708 WEST SWANN AVE.
SUITE 200
TAMPA, FL 33609
PHONE: 813.874.1700

TO THE BEST OF THE KNOWLEDGE OF THE ARCHITECTS AND ENGINEERS, PLANS AND SPECIFICATIONS COMPLY WITH THE APPLICABLE MINIMUM BUILDING CODES AND THE APPLICABLE MINIMUM FIRE SAFETY STANDARDS

SOUHEIL CHEHAYEB, P.E.
FL License No. 49521

no.	date	revision descriptions
1	12.02.2025	REVISED PER COORDINATION W/ TENANT INTERIORS

CHIPOTLE MEXICAN GRILL BUILDING SHELL

NOLTE RD. AND KYRST RUN
ST. CLOUD, FLORIDA

08.29.2025
date

25008
comm. no.

POWER RISER DIAGRAM

E300

Name: Garrison DSI Printed Date: 11/25/2025 1:14 PM

DIVISION 16 – ELECTRICAL

N130

SECTION 16010 – GENERAL PROVISIONS

1. GENERAL

1.01 The following are minimum requirements and shall govern, except that building laws and/or drawings shall govern when their requirements are in excess thereof.

2. DRAWINGS AND SPECIFICATIONS

2.01 The architectural, mechanical, electrical and equipment drawings and specifications are hereby incorporated into and become a part of this Division. This Contractor shall examine all such drawings and specifications and become thoroughly familiar with provisions contained herein and the submission of his bid shall be construed as indicating such knowledge.

2.02 Electrical drawings are diagrammatic and are intended to show the approximate locations of equipment and piping. Dimensions given on the plans shall be verified in the field. Drawings may not be scaled to obtain exact dimensions.

2.03 The exact locations of apparatus, fixtures, equipment and conduits shall be ascertained from the Owner's representative in the field, and the work shall be laid out accordingly. Should the Contractor fail to ascertain such locations, the work shall be changed at his own expense when so ordered by the Owner. The Owner reserves the right to make minor changes in the location of conduit and equipment up to the time of installation, without additional cost.

2.04 The electrical drawings and specifications are intended to supplement each other and any material or labor called for in one shall be furnished and supplied even though not specifically mentioned in both. Labor and/or materials neither shown nor specified, but necessary for the completion and proper functioning of the system, shall be provided by this Contractor.

2.05 The work required under these specifications includes all labor, materials, equipment and services necessary to provide lighting and power systems, service entrances, motor controls and connections, branch circuiting, feeders, panels, fixtures, wiring devices, and other items shown on the plans or specified.

2.06 When the specification of an item is not identified with a particular area, the item shall pertain to all areas.

2.07 This Contractor shall furnish such labor and materials as hereinafter specified and as required to complete all electrical connections in accordance with the manufacturer's requirements for all mechanical equipment and Owner's equipment as shown and/or specified.

3. EXAMINATION OF SITE

3.01 Bidder is to visit the site and familiarize himself with existing conditions and satisfy himself as to the nature and scope of work. The submission of a bid will be evidence that such an examination has been made. Later claims for labor, equipment of materials required, or for difficulties encountered which could have been foreseen had an examination been made, will not be allowed.

4. DEFINITIONS

4.01 "Install" shall mean to place, fix in position, secure, anchor, wire, etc., including necessary appurtenances and labor so that equipment or installation will function as specified and intended.

4.02 "Furnish" shall mean to purchase and supply equipment or components.

4.03 "Provide" shall mean to "furnish and install".

4.04 "Or approved equal" shall mean equal in type, design, quality, style, color, etc., as determined by the Engineer/Architect.

5. INTERFERENCES

5.01 It shall be the duty of this Contractor to report any interferences between his work and that of any other Contractor to the Owner or Architect as soon as they are discovered. The Owner or Architect will determine which equipment shall be relocated regardless of which was first installed, and his decision shall be final.

6. MATERIALS AND WORKMANSHIP

6.01 All work shall be installed in a practical and workmanlike manner by competent workmen, skilled in their branch of the trade.

6.02 Unless otherwise specified or indicated on the drawings, all materials shall be new and free from defects and shall be the best of their several kinds.

6.03 All material and equipment shall meet or exceed standards specified by UL, NEMA, ANSI and IEEE wherever such standards have been established.

6.04 From time–to–time during the operation and at the completion thereof, this Contractor shall remove all debris and excess materials caused by his work and he shall leave the area of the operation broom clean.

6.05 All electrical equipment and material shall bear the Underwriter's Laboratories label.

7. SUPPORTS

7.01 This Contractor shall furnish and install all angle iron, channel iron, rods, supports or hangers required to install or mount panelboards, switchboards, or any electrical equipment called for on the plans, in these specifications, or as necessary to mount any piece of electrical equipment, material, or device. Conduit, fixtures, or any electrical devices shall not be supported from steel deck, bridging, ceiling, or ceiling support wires.

8. TEMPORARY CONSTRUCTION POWER AND LIGHTING

8.01 Sufficient temporary power, during construction, for heating, lighting, appliances, or motorized portable equipment shall be provided by the Electrical Contractor.

9. CODES, LAWS, PERMITS AND INSPECTIONS

9.01 Install all work in full accordance with codes, rules and regulations of municipal, city, county, state and public utility, and all other authorities having jurisdiction over the premises. This shall include all requirements of the City Building Code, regulations of the State Department of Industrial Relations, OSHA, ADA (Americans with Disabilities Act), and the requirements of the National Electrical Code, as interpreted by the Local Inspection Division. All these codes, rules, and regulations are hereby incorporated into this specification.

9.02 Comply with specification requirements which are in excess of code requirements and not in conflict with same.

9.03 The Contractor shall secure all permits and certificates of inspection incidental to the work, required by foregoing authorities. All such certificates shall be delivered to the Owner in duplicate, before final payment on contract will be allowed. The Contractor shall pay all fees, charges and other expenses in connection therewith.

10. FIELD CHANGES (AS BUILT DRAWINGS)

10.01 Keep one (1) set of working drawings and shop drawings at the job site for sole purpose of recording all changes made during construction. After completion of the work and before requesting final payment, the above mentioned drawings shall be delivered to the Owner.

11. LABELING AND NAMEPLATES

11.01 Permanently label transformers, switchboards, panelboards, time switches and safety switches indicating equipment or panels and areas which they serve.

11.02 Lighting and appliance panels shall be labeled as shown on drawings.

11.03 Electrical Contractor shall furnish and install identification for pull or junction boxes furnished by him.

11.04 Identify as to use on face of equipment by means of laminated black and white phenolic label with 3/8" letters engraved through black to white.

11.05 Materials

A. Nameplates: Engraved three–layer laminated plastic, white letters on a black background.

11.06 Installation

A. Degrease and clean surfaces to receive nameplates and tape labels.

B. Install nameplates and tape labels parallel to equipment lines.

C. Secure nameplates to equipment fronts using screws, rivets or adhesive. Secure nameplates to inside face of recessed panelboard doors in finished locations.

D. Mark every junction or pull box cover plates with the circuit number(s) of all wires contained therein.

11.07 Wire Identification:

A. Provide wire markers on each conductor at terminal strips and at final line and load connections. Identify with branch circuit or feeder number of power and lighting circuits, and with control wire number as indicated on equipment manufacturer's shop drawings for control wiring or as drawings indicate.

B. All wires shall be factory color coded. Color code branch circuit wiring as follows:

1. Three Phase System:

	120/208V	277/480V
Phase A	Black	Brown
Phase B	Red	Orange
Phase C	Blue	Yellow
Neutral	White	Gray
Ground	Green	Green

2. Switched Wires: Other than colors listed above
3. Travelers Between 3–Way Switches: Purple
4. Insulated Ground: Green with Yellow Stripes

C. All wires shall be indentified by circuit numbers, in all cabinets, boxes, wiring through, other enclosures at all splices, termination points, etc..

12. GUARANTEE

12.01 In addition to guarantees of equipment by manufacturer of same, this Contractor shall also guarantee equipment provided by him and shall be held for a period of one (1) year to make good any defects in material and workmanship occurring during this period, at his sole expense. This one (1) year period shall start from the date of final acceptance by Owner.

13. SCOPE OF WORK

13.01 Furnish all labor and material necessary to complete the electrical work shown on the drawings, specified herein or required to complete the construction of the building as shown.

13.02 The listing herein of article or material, operation or method, required to be provided and installed by the Contractor (unless noted to be supplied by others) shall be of quality or subject to qualifications as noted. Each operation shall be performed according to standard practice, manufacturer's instructions, and conditions stated, providing, therefore, all necessary labor, equipment and incidentals.

13.03 The electrical Contractor shall schedule his work to conform to the progress of the other trades and Contractors employed on this project.

13.04 The electrical work shall include but is not limited to the following:

A. Demolition work as required.

B. Complete power and lighting distribution systems including panels, as shown on plans.

C. Complete branch circuit wiring system.

D. Temporary electric service as required for construction.

E. Testing of all electrical equipment.

F. Fire Alarm System as noted and/or shown.

G. Provide and install complete lighting system as shown on plans.

14. MANDATORY SHOP DRAWINGS

14.01 Submit a minimum of five (5) copies of all required electrical shop drawings.

14.02 Shop Drawings shall be submitted for:

Switchgear
All Lighting Fixtures
All Wiring Devices
Fire Alarm Devices

END OF SECTION 16010

SECTION 16100 – BASIC MATERIALS AND METHODS

1. CONDUIT

1.01 All wire shall be run in accordance with the applicable codes in corrosion resistant, rigid, threaded, metal conduit or electrical metallic tubing (E.M.T.), unless otherwise specifically stated herein.

A. Conduit below first floor slab, exposed to weather, or underground shall be rigid, threaded, galvanized, heavy wall type.

B. Carlon PVC, Type 40 heavy wall conduit with ground wire may be used underground below floor slab or pavement in lieu of rigid, threaded, galvanized conduit. PVC schedule 40 conduit shall not be run in or above first floor slab. PVC conduit shall terminate below floor slab with rigid, threaded metal conduit adapter. Conduit above slab shall be metal.

C. A ground conductor shall be supplied in all conduits and raceways. The ground conductor shall be copper, and sized per the N.E.C. or as shown on drawing, whichever is more stringent.

D. PVC conduit run beneath areas subject to heavy vehicular traffic such as commercial parking areas, drive through, etc. shall be concrete encased. This conduit shall comply with NEMA TC–6 and –8 (Power), TC–10 (Telephone), ASTM F512 (Concrete Encasement Applications) and UL–651 (Standard).

E. PVC conduit used between lighting standards shall be Carlon Type 40 min. and comply with NEMA TC–2, TC–3, and UL–651 (Standard).

1.02 Conduit and E.M.T. shall be delivered to the building in 10–foot lengths and each length shall have the Underwriter's Laboratories label.

1.03 Conduit and E.M.T. shall be run concealed in all finished areas of the building.

1.04 E.M.T. connectors and couplers shall be rain tight type made of die cast as manufactured by Thomas & Betts, Steel City, or Appleton. Bends and offsets shall be made with a hickey or power bender without kinking or destroying the smooth bore of the conduit. Paralleled conduits shall run straight and true with offsets uniform and symmetrical. Conduit terminals at boxes and cabinets shall be rigidly secured with locknuts and bushings as required by the National Electrical Code and local electrical code. Insulated bushings shall be used on all conduit 1–1/4" trade size and larger.

1.05 Conduit shall be securely fastened in place at no more than 8–foot centers, and hangers, supports or fastenings shall be provided at each condulet, elbow and at the end of each straight run, terminating at a box or cabinet. Conduit shall not be suspended from the ceiling or ceiling suspension wires.

1.06 Horizontal and vertical conduit runs shall be supported by one–hole malleable straps or other approved metal device with suitable bolts, expansion shield or beam clamp for mounting to building structure or special brackets. Conduit shall be supported from structural steel or joist and independent of other piping. Do not support conduit from metal roof deck or any other support device of another trade.

1.07 Armored cable (BX) or nonmetallic sheathed cable (Romex) shall not be used.

1.08 No aluminum conduit shall be used.

1.09 Only short runs of flexible metal conduit not over 6' in length and having a ground conductor, shall be used for terminal connections to motors and also for electrical equipment where it is not practical to make final connection with rigid conduit. Flexible conduit exposed to weather shall be Sealtite.

1.10 Exposed conduit and conduit in ceiling space shall be run parallel to the building structure.

1.11 Conduit system shall conform to all the requirements of the National Electrical Code (N.E.C./N.F.P.A.–70) and local codes.

1.12 Metal Clad (MC) cable may be used where allowed by these drawings and conform to notes shown on sheet E0.0.

2. CONDUCTORS

2.01 Sizes of conductors for feeders are given on the drawings and no wire smaller than #12 gauge shall be used for branch lighting or power circuits. All wiring shall have the U.L. label and be of 98% conductivity copper. Aluminum wire or aluminum cable is not acceptable.

A. The gauge of all wire shall be in accordance with B&S standard.

2.02 All wire and cable for branch lighting or small power circuits shall have "NEC" Type "THHN/THWN" 600–volt insulation.

2.03 Wire and cable above #8 gauge shall be stranded Type "THWN" insulated for 600–volts.

2.04 For special conditions, as provided by the National Electrical Code, Type "R.H.H., A.V.A." or other required insulation shall be used.

2.05 Where lighting fixtures are used as raceways, 90 degree C. minimum insulated wire shall be used.

3. GROUNDING

3.01 This Contractor shall provide, install and connect a complete system of grounding for all equipment and structures. A good mechanical and electrical connection shall be made with approved grounding connectors.

3.02 Electrical system and equipment grounds shall comply with the N.E.C. as well as all local and state codes and regulations.

3.03 Panels, conduit systems, motor frames, lighting fixtures and other equipment that are part of this installation shall be securely grounded both mechanically and electrically in accordance with all codes.

3.04 System ground shall not exceed a maximum of ten (10) OHMS resistance. Verify existing grounding system and add additional grounding as required to meet the above specified value.

3.05 Main grounding system is existing.

3.06 A ground conductor shall be supplied in ALL conduit. It shall be insulated, stranded, annealed copper conductor.

4. TOGGLE SWITCHES AND RECEPTACLES

4.01 All general purpose switches and receptacles shall be ivory in color (except special configurations not available in ivory).

4.02 Acceptable device manufacturers are Hubbell, Arrow Hart, Leviton, or Bryant. This basis of design is Leviton.

4.03 Wall Switches:

A. Single poles #1221, double pole #1222 and three (3) way switches #1223 shall be rated 20–ampere, 120/277 volts.

B. Switches shall be mounted 4'–0" above finished floor to centerline.

4.04 Duplex receptacles shall be 20–ampere at 125–volts, Leviton catalogue #5362 or approved equal. Mount at 18" above floor to centerline or as noted on plans.

4.05 Outdoor receptacles shall be weatherproof with spring covers (Leviton #4926 plates).

5. WALL PLATES

5.01 Unless otherwise noted, all plates in finished areas for wall switches, receptacles and telephone outlets shall be smooth plastic.

5.02 All plates shall have full contact with the wall and boxes. Edges shall be parallel to the finished walls and ceilings.

6. OUTLETS

6.01 Locations of outlets are shown approximately on the drawings. Contractor shall refer to the shop drawings of the manufacturers of the equipment for the exact location of outlets for fixtures, motors, heaters and their respective control devices. Approximate locations of light fixtures are shown on the drawings.

6.02 Outlet boxes for concealed work shall be pressed steel boxes, galvanized and not less than #12 gauge, except floor boxes which shall be cast iron. Each ceiling outlet designated for a lighting fixture shall have a fixture support secured in place with nuts and bolts. Ceiling boxes shall be four inches (4") round and octagonal with lugs and screws for back plates. Wall outlets shall be four inches (4") square by 1–1/2" deep, single or double cover, except gang boxes of similar depth shall be used at locations requiring more than 2–gang.

6.03 Outlets on the exterior of the building shall be flush weatherproof type.

6.04 All outlets shall be firmly secured in place. Outlets in finished areas shall be flush with finished ceiling or walls.

6.05 All outlet locations in floor shall be verified with Owner's Representative before pouring of concrete floor.

7. BRANCH CIRCUIT WIRING

7.01 The Electrical Contractor shall provide and connect a complete system of panels, conduits, wire fittings, boxes, supports and all other miscellaneous materials required for equipment as indicated on the plans and ready for operation by the Owner.

7.02 All circuits shall be color coded.

END OF SECTION 16100

SECTION 16400 – ELECTRICAL SERVICE AND DISTRIBUTION

1. SECONDARY SERVICE

1.01 Electrical service shall be secondary, as shown on plans with grounded and neutral and secondary metering. Provide all necessary equipment and material and install the service, metering and distribution equipment accordingly.

1.02 The Electrical Contractor shall be responsible for contacting the power company to secure complete details for the connection to the existing primary transformer.

1.03 Electrical Contractor shall provide secondary service cables and conduits from the transformer to main service as indicated on drawings.

1.04 Site electrical shall be coordinated with local power company by Electrical Contractor.

1.05 Provide coordination, via the General Contractor, of the Site Electrical Contractor for the final locations, penetrations, and service tie–ins associated with secondary power service entrance conduits.

2. SAFETY SWITCHES

2.01 General

A. Switch shall be general duty type with visible, quick make, quick break blades. Switches shall be U.L. listed and conform to NEMA Standards.

2.02 Enclosures

A. Steel enclosures with operating handle at side. NEMA 1 for general indoor use, NEMA 3R for general outdoor use and NEMA 4 (stainless steel) where indicated on the drawings. Manufacturer's standard enamel finish.

B. The enclosure shall be interlocked with the switch handle such that the enclosure door cannot be opened with switch in the "on" position. Switch handle shall be capable of being padlocked in the "off" position.

2.03 Ratings

A. Safety switches shall be rated for the continuous current and voltage indicated on the drawings. Where used in conjunction with motor circuits, units shall be horsepower rated for the size motor indicated.

B. Switches used as service entrance equipment shall be U.L. listed for use as service quipment.

2.04 Poles

A. Safety switches shall have the number of poles indicated on the drawings, but not fewer than one (1) pole for each ungrounded conductor to be opened.

2.05 Fuses

A. Where indicated, safety switches shall be fused in each ungrounded leg in accordance with the requirements of the Section entitled "Fuses".

2.06 Acceptable

A. Acceptable manufacturers are General Electric, Westinghouse, Challenger, Sq. D, or Seimens.

3. DISTRIBUTION PANELBOARDS (INCLUDING POWER PANELS)

3.01 Power and distribution panels shall be suitable for voltages indicated on plans and/or riser diagrams. Panels shall be 3–phase, 4–wire, solid neutral, aluminum buss, dead front with lugs in the mains, fuses and heavy–duty switches in branch circuits of size and number indicated on the plans. All lugs shall be U.L. approved CU/Al type.

3.02 Panels shall be provided with spares and full provisions for future breakers as shown.

3.03 Panels shall be manufactured as a complete unit by Siemens–ITE, Square D, General Electric Company, or Challenger, not an assembly of parts secured from a supply house.

3.04 Panelboards and switches shall be identified for "usage".

4. LIGHTING AND APPLIANCE PANELBOARDS

4.01 Lighting panels shall be dead front type, aluminum buss, with lugs only in the mains and branch circuits as indicated on the drawings. Panels shall have 20 amp single, double or 3–pole circuit breakers (capable of interrupting available short circuit current) as required in each branch circuit. Where breakers larger than 20 amperes are required, the sizes are noted on the drawings. Breakers shall be bolted to bus type, quick–make, quick–break and capable of interchanging 1,2 or 3–pole units. Multiple units shall be common trip. Provide spare breakers in each panel as shown. All lugs shall be U.L. approved CU/AL type.

4.02 Electrical Contractor shall arrange circuits as near as possible to circuit numbers on the drawings. At finish of job, Electrical Contractor shall take current reading checks of respective phases. A minimum of circuit connections shall be rearranged to balance (as closely as possible) the load on the panel.

4.03 Panels shall be enclosed in galvanized steel of code thickness. Cabinets shall be large enough to allow standard size wiring gutters on each side, top and bottom of panels. Mount not over 6'–6" from floor to top of panels.

5. GENERAL (FOR ALL PANELS AND PANELBOARDS)

5.01 Metal framed card holders with typewritten circuit directory must be provided for each panel. Directory shall be clear and designation shall match identification on equipment. Panelboards (switchboard, distribution, power panels and lighting panels) shall be identified by a label on the switch and/or panel door. Provide engraved laminated phenolic nameplates with 3/8" letters engraved through black to white.

5.02 All panels, safety switches, starters and in general, all equipment requiring lugs shall be equipped with solderless type U.L. approved lugs.

5.03 Provide all necessary unistrut, channel, backing and supports to mount switchboard and panelboards securely in place.

6. FUSES

6.01 This Contractor shall replace all fuses blown during construction and testing and shall provide a complete set of fuses in all fuse holders, switches, panels and all other devices requiring fuses.

6.02 Fuses in switchboard and main distribution panelboards in Electric room shall be as indicated on plans.

A. Provide label in each switch indicating fuse type, ampere rating and interrupting rating.

B. Replace all blown fuses up to final acceptance of job.

C. Provide and place in a wall mounted metal cabinet in Electrical Room a spare set of three (3) fuses for each size and type fuse used in switchboard in Electrical Room. The cabinet shall be similar to Bussman Spare Fuse Cabinet #SFC, with door, locking handle, internal shelf and fuse stock list.

6.03 Fuses shall be as specified herein and indicated on drawings. Alternate manufacturer is Littelfuse. In the event the Electrical Contractor wishes to furnish materials other than those specified, a written request, along with complete application data to assure a selectively coordinated system, shall be submitted to the Engineer for evaluation.

END OF SECTION

SECTION 16500 – LIGHTING

1. LIGHTING FIXTURES

1.01 All fixtures shall be as shown on Fixture Schedules, and approved by owner.

1.02 Unless otherwise indicated, all lighting fixtures shall be furnished and installed by Electrical Contractor as indicated on the Lighting Fixture Schedules, including lamps.

1.03 All fixtures shall bear the Underwriter's Laboratories label and shall be installed according to manufacturer's instruction.

1.04 All fixtures, unless otherwise indicated, shall be new and undamaged.

1.05 Surface–mounted fixtures shall be mounted 1–1/2" from ceiling. Mount spacers and supports on 48" centers with additional support at the end of each row of fixtures.

1.06 This Contractor shall provide and install all necessary support media for all lighting fixtures including structural steel, angles, rods, etc. In general, fixtures shall be supported in a manner acceptable to the local inspection authorities. All fixtures shall be firmly supported from beams or joists.

1.07 This Contractor shall support all fixtures from building structural members and NOT from ceiling system.

1.08 A cable, raceway, box, or luminaires installed in exposed or concealed locations under metal–corrugated sheet roof decking, shall be installed and supported so there is not less than 1–1/2 inches measured from the lowest surface of the roof decking to the top of the cable, raceway, box or luminaires. Cable, raceway, or box shall not be installed in concealed locations of metal–corrugated sheet decking type roof.

END OF SECTION 16500

ALUMINUM CONDUCTORS (WHERE ALLOWED BY OTHER SECTION OF THIS DOCUMENT)

1. Aluminum conductors shall be AA–8000 series aluminum alloy, compact stranded, type XHHW insulation.

2. Aluminum conductors shall be used only where specified on these drawings. where conductors are not specified they shall be copper.

3. All aluminum wiring installation shall meet, as a minimum, the national electrical installation standard (NEIS) and National Electrical Contractors Association (NECA) AA/104–2000 "Recommended practice for installation of aluminum building wire and cable".

4. Installation requirements:

A. Oxide inhibitor shall be used at all aluminum conductor terminations.

B. The insulation on an aluminum conductor shall be stripped using tools manufactured for the conductor type and insulation type, or by a standard method, such as, penciling or whittling the insulation from the conductors. However; never "ring cut" the insulation. when penciling, care should be taken not to damage any of the individual strands.

C. Wire brush the conductor to remove any insulation that may become trapped between the strands and apply a listed joint compound.

D. Verify that the connectors are dual rated and listed by ul for use with aluminum and copper, and sized to accept aluminum conductors of the ampacity specified. These terminations shall be listed and labeled, ALCU, AL7CU, or AL9CU.

E. All terminations of aluminum conductors shall be via compression fittings/terminals for 8000 aluminum alloy conductors. The bare conductor shall be inserted in the connector barrel and crimped with a tool recommended by the connector manufacturer. Compression connectors are generally marked with the die size to be used. After this process is completed, remove any access oxide inhibitor from the conductor.

5. ALUMINUM CONDUCTOR SCHEDULE NOTES:

A. All conductors shall be copper unless specifically noted as aluminum (AL) on the panel schedules or in the riser noted. installation shall be in strict compliance with N.E.C.., general notes listed on this sheet, and good workman ship.

B. Contractor shall coordinate with switch gear manufacturer for lug size, or quantity modifications. If lug reducers are elected to be used, all products and termination means shall be in strict compliance with N.E.C. and manufacturer recommendations.

CHEHAYEB & ASSOCIATES, INC.
CONSULTING PROFESSIONAL ENGINEERS
3702 AZEELE ST.
TAMPA, FL 33609
(813) 876–1415
www.chehayeb.com
LIC. #49521 SOUHEIL S. CHEHAYEB CERT. #7340

25–62

FWH Architects
3336 Grand Blvd. Suite 201
Holiday, Florida 34690
Ph. 727. 815. 3336
FABER@FWHARCHITECTS.COM

brightwork real estate
3708 WEST SWANN AVE.
SUITE 200
TAMPA, FL 33609
PHONE: 813.874.1700

TO THE BEST OF THE KNOWLEDGE OF THE ARCHITECTS AND ENGINEERS, PLANS AND SPECIFICATIONS COMPLY WITH THE APPLICABLE MINIMUM BUILDING CODES AND THE APPLICABLE MINIMUM FIRE SAFETY STANDARDS

SOUHEIL CHEHAYEB, P.E.
FL License No. 49521

no.	date	revision descriptions

CHIPOTLE MEXICAN GRILL
BUILDING SHELL

NOLTE RD. AND KYRST RUN
ST. CLOUD, FLORIDA

08.29.2025
date

25008
comm. no.

ELECTRICAL SPECIFICATIONS

E400

Name: Garrison DSI Printed Date: 8/29/2025 1:40 PM